Maintenance

e-up! 2014 ➤
e-up! 2017 ➤
up! 2012 ➤
up! 2017 ➤

Edition 01.2019

Maintenance

Heading

Technical information should always be available to the foremen and mechanics, because their careful and constant adherence to the instructions is essential to ensure vehicle road-worthiness and safety. In addition, the normal basic safety precautions for working on motor vehicles must, as a matter of course, be observed.

Contents

1 Engine list

(VIGG001260; Edition 01.2019)

This chapter provides information on the following subjects:

Note

To ease the search for an engine, the engine codes are listed in alphabetical order.

Petrol engines

Engines ⇒	Petrol engine	Petrol engine	Petrol engine	Petrol engine
Displacement l	1.0	1.0	1.0	1.0
Engine code	**CHYA**	**CHYB**	**CHZA**	**CPGA**
No. of cylinders/valves per cylinder	3/4	3/4	3/4	3/4
Power kW at rpm	44/5000	55/6200	66/5500	50/6200
Torque Nm at rpm	95/3000-4300	95/3000-4300	160/1500-3500	90/3000
Bore ∅ mm	74.5	74.5	74.5	74.5
Stroke mm	76.4	76.4	76.4	76.4
Compression ratio	10.5	10.5	10.5	11.5
Injection/ignition	Motronic ME 17.5.20 PFI	Motronic ME 17.5.20 PFI	Motronic Bosch ME 17 TSI	Motronic ME 17.5.20 CNG/PFI
RON unleaded, at least	95	95	95	Natural gas and 95 (in exceptional circumstances at least 91 RON but with reduced output)
Petrol engine particulate filter	no	no	no	no
Camshaft drive	Toothed belt	Toothed belt	Toothed belt	Toothed belt

Engines ⇒	Petrol engine	Petrol engine	Petrol engine
Displacement l	1.0	1.0	1.0
Engine code	**DAFA**	**DKLC**	**DKRA**
No. of cylinders/valves per cylinder	3/4	3/4	3/4
Power kW at rpm	44/5000-6000	66/5000-5500	85/5000-5500
Torque Nm at rpm	95/3000-4300	160/1500-3000	200/2000-3500
Bore ∅ mm	74.5	74.5	74.5
Stroke mm	76.4	76.4	76.4
Compression ratio	10.5	10.5	10.5
Injection/ignition	Motronic ME 17.5.20 PFI	Motronic Bosch TSI	Motronic Bosch TSI

Engines ⇒	Petrol engine	Petrol engine	Petrol engine
Displacement l	1.0	1.0	1.0
Engine code	**DAFA**	**DKLC**	**DKRA**
RON unleaded, at least	95	95	95
Petrol engine particulate filter	no	yes	yes
Camshaft drive	Toothed belt	Toothed belt	Toothed belt

Electric motor

Engines ⇒	Electric motor
Engine code	**EABA**
Power kW	60
Torque Nm	210

2 Service work

2.1 Information on fixed service

2.1.1 Service identification

– Referring to vehicle data sticker ⇒ page 19 , check if vehicle is equipped with following PR numbers:

The PR number is decisive for the service intervals ⇒ page 4 .

Vehicle ID with PR number

Model year	PR number	Service
► 2012	QG0	Fixed service
2013 ►	QI1, QI2, QI3, QI4, QI7	Fixed service
2014 ►	VI9	Fixed service (electric vehicle)

In the past, the PR numbers QG0, QG1 and QG2 determined the type of service.

With immediate effect, these PR numbers only denote whether an engine oil level sensor is installed or not and no longer have an influence on the oil change interval.

2.1.2 Fixed service

For vehicles with a fixed service, fixed services are calculated. This means that the mileage or time values are already set by Volkswagen. For normal operating conditions achieving these service intervals is technically assured.

Therefore the service intervals are fixed.

For vehicles

- which were delivered without extended servicing intervals (ESI) (PR numbers “QG0”, “QI1”, “QI2”, “QI3”, “QI4”, “QI7”),
- or for which the extended servicing interval (ESI) was stopped
- or for which no LongLife engine oil was used
- or electric vehicles

fixed service applies.

These non-flexible service intervals apply to all types of service.

Vehicles with PR number “QG0”

The vehicles are “not” factory-fitted with components for flexible service. Fixed service intervals apply for maintenance.

2.1.3 Service interval display

Fixed service interval display (only vehicles with a fixed service)
⇒ page 4

Service type for service due ⇒ page 4

Service interval display: resetting ⇒ page 98

Fixed service interval display (only vehicles with a fixed service)

Calculation of service intervals:

- The service interval for vehicles with a fixed service is calculated in fixed service intervals. This means that the mileage or time values have been previously determined and specified by Volkswagen.
- For normal operating conditions achieving these service intervals is technically assured.

Service type for service due

- When switching on ignition, a due service is indicated by a gong sound. In addition, the text “INSP” appears for a few seconds.

– Return to the original display alternatively by pressing “OK button” -1- for multifunction display in windscreen wiper lever.

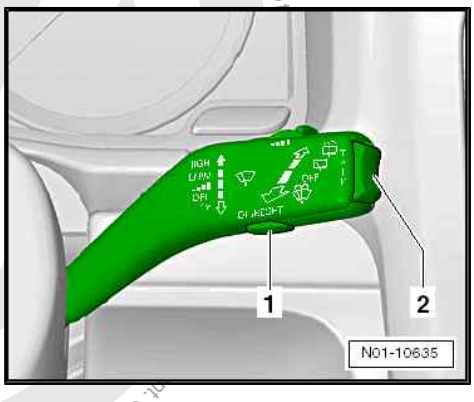

– Press also button -3- in dash panel insert to return to the original display.

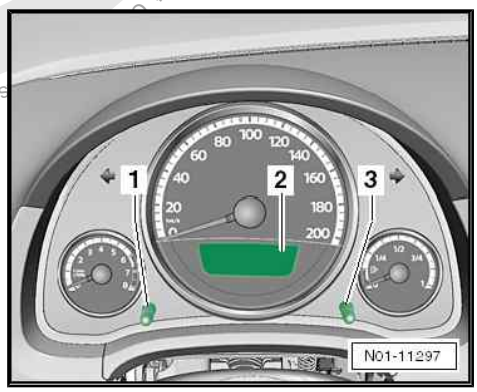

2.2 Service tables

Note

- *The service tables apply in general with differences depending on the vehicle model and equipment level. There is no relation between individual vehicles and identified vehicle identification numbers.*
- *Vehicle-specific time and mileage dependent additional work can only be found in the ⇒ maintenance tables .*

2.2.1 Delivery inspection

Scope of work
– Battery: check battery terminal clamps for secure seating.
– Transportation mode: switch off.
– Service interval display: reset.
– Status of battery: read.
– Event memories of all systems: read.
– Radio/radio navigation system: store local radio stations to station buttons.
– Time and date: set.
– All switches, electrical consumers, sockets, gauges and other controls: check function.
– Front passenger airbag: check key switch and ON/OFF function.
– Window regulators: initialise (activate).
– Vehicle interior: check for cleanliness.
– Protective seat covers and protective carpet film: remove.
– All equipment which has been packed inside vehicle (if part of original equipment): install.
– Two safety hammers: install according to installation instructions.
– Edge protection on doors (plastic film): remove.
– Vehicle exterior: check for cleanliness.
– Tyre pressure: check.
– Wheel bolts: tighten to specified torque.
– Wiper blade protection: remove.
– Tyre Pressure Loss Indicator: calibrate after tyre pressure has been corrected.
– Vehicle: inspect for leaks and damage from above and below.
– Brake system: inspect for leaks and damage.
– Transportation devices: remove (if fitted).
– Vehicle underside (underbody): inspect for damage.
– Windscreen wash/wipe system and headlight washer system: check function and settings.
– Engine oil level: check; observe oil specification when topping up.
– Coolant level: check.
– Brake fluid: renew, if vehicle is older than 6 months.
– Brake fluid level: check that it is at maximum.
– Keys: check number, operation and cleanliness.
– Service Schedule / Digital Service Schedule: enter pre-delivery inspection.
– Owner's literature: check that literature is complete and prepare for delivery to customer.
– Carry out road test.
– Warning stickers: check that they are present.
– Charging cable: check that cable is present and check its condition. • Applies only to BEV and PHEV
– High-voltage battery: charging • Applies only to BEV and PHEV

2.2.2 Scopes of service

Note

- *Depending on the time elapsed and the mileage since the last service, service events may be combined (inspection with oil change).*
- *An extended scope of inspection is carried out in combination with an inspection.*
- *The scopes of service work are generally applicable and differ according to vehicle model and equipment level. There is no relation between individual vehicles and identified vehicle identification numbers.*
- *Scopes of service work for individual vehicles can be found only in the maintenance tables.* ⇒ *Maintenance tables*

Oil change service	Inspection	Extended scope of inspection (applies only in addition to regular inspection)	Scope of work
Vehicle interior			
		X	– Interior lights: check function of headliner, luggage compartment and glove compartment lights.
	X		– Horn: check function.
	X		– Charging cable: check that cable is present and check its condition. • Applies only to BEV
	X		– High-voltage battery: check charge level, charge as necessary. • Applies only to BEV
Vehicle exterior			
	X		– Headlight washer system: check function.
	X		– Front lighting: check function.
	X		– Static cornering light (cornering light): check function.
	X		– Automatic headlight control: check function.
	X		– Rear lighting: check function.
	X		– Windscreen wash/wipe system: check function and spray jet settings and adjust if necessary; check for damage.
	X		– Wiper blades: move blades to service position and check for damage; check park position.
		X	– Interior and exterior of body: inspect for corrosion.
		X	– Windscreen: inspect for damage.
	X		– High-voltage charging socket in radiator grille: inspect for soiling and damage. • Applies only to PHEV

Oil change service	Inspection	Extended scope of inspection (applies only in addition to regular inspection)	Scope of work
	X		– High-voltage charging socket in radiator grille and tank cap: inspect for soiling and damage. • Applies only to BEV
X			– Reducing agent (AdBlue®): replenish only if customer requests. • If part of equipment
		X	– Bonnet catch hook: grease. • Only applies for: CC, Touran 1T, Golf Cabriolet, EOS, Phaeton, Golf 5K1, Golf Plus, Passat 36, Tiguan 5N, Sharan 7N, Touareg 7P
		X	– Door arrester: grease. • Applies only to Touran 1T, EOS, Golf Cabriolet, CC and Phaeton
		X	– Convertible top: clean and lubricate locking element. • Applies only to Golf Cabriolet and Beetle Cabriolet
		X	– Convertible top: perform water test. • Applies only to Golf Cabriolet and Beetle Cabriolet
Underside of vehicle			
X			– Drain engine oil and renew oil filter.
	X		– Engine and components in engine compartment: inspect for leaks and damage (from below).
	X		– Gearbox, final drive and drive shaft boots: inspect for leaks and damage.
X			– Brakes, front and rear: check thickness of pads/linings and condition of brake discs.
		X	– Poly V-belt: check condition.
		X	– Swivel joints, axle mountings, coupling rod bearings and anti-roll bar rubber mounting: inspect for damage.
		X	– Track rods: checking clearance, attachment and boots
	X		– Brake system and shock absorbers: inspecting for leaks and damage
		X	– Exhaust system: inspect for leaks, firm seating and damage.
		X	– Underbody: inspect for damage to undercoating, underbody cladding, routing of lines, plugs.
		X	– Front and rear coil springs and rubber buffers: inspect for damage.
X			– Warning stickers: check that they are present. • Applies only to high-voltage vehicles
	X		– Removable towing bracket: check. • If part of equipment

Oil change service	Inspection	Extended scope of inspection (applies only in addition to regular inspection)	Scope of work
		X	– Air suspension: check for leaks and damage. • Applies only to Touareg and Phaeton
		X	– Sunroof: check function, clean guide rails and lubricate with special grease.
Tyres			
	X		– Tyre pressure: check.
	X		– Tyre mobility set: check for damage and use.
	X		– Tyres: check condition and wear pattern of tyre; enter tread depth.
Engine compartment			
X			– Engine oil: replenish.
	X		– Oil level: check.
	X		– Battery and, if fitted, second battery: check with battery tester.
	X		– Engine and components in engine compartment: inspect for leaks and damage (from above).
	X		– Brake fluid level (dependent upon brake pad/lining wear): checking
	X		– Cooling system: check frost protection and coolant level.
	X		– Window wash/wipe system: check anti-freeze protection; replenish washer fluid.
	X		– Hybrid components: inspect for damage to high-voltage components and wires. • Applies only to HEV and PHEV
	X		– High-voltage components and high-voltage cables: inspect for damage and correct routing and securing of lines. • Applies only to BEV
X			– Plenum chamber: check for soiling. • Applies only to up!
	X		– Plenum chamber: check for soiling. • Applicable for e-up! only
Final checks			
X			– Service interval display: resetting
	X		– Headlight adjustment: check and adjust as necessary.
	X		– Tyre Pressure Loss Indicator: calibrate after tyre pressure has been corrected.
	X		– Carry out road test.

Oil change service	Inspection	Extended scope of inspection (applies only in addition to regular inspection)	Scope of work
X			– High-voltage battery: charge. • Applies only to PHEV

2.2.3 Service intervals to model year ►2013

Note

- *For extremely uneconomical driving style or use under extreme conditions ⇒ page 20 , the shortest interval for an oil change service is "5,000 km or 1 year".*
- *However, other intervals apply for other countries. Your importer will inform you about this.*

up! (12) ►2012			
SERVICE INTERVALS			
From - to	**Engine/Engine code/ PR No./Remarks**	**Service events: Intervals**	**Indicated on service interval display (includes oil change)**
From introduction ►2012	For all vehicles	Oil change service: every 15,000 km or 1 year	YES
		Interval service: every 30,000 km or 2 years	YES
	For all vehicles	Inspection service: after 3 years or max 60,000 km, then every 2 years or 60,000 km	NO

up! (12) 2013			
SERVICE INTERVALS			
From - to	**PR No.**	**Service events: Intervals**	**Indicated on service interval display (includes oil change)**
2013	QI1	Oil change service (fixed): every 5,000 km or 1 year	YES
	QI2	Oil change service (fixed): every 7,500 km or 1 year	YES
	QI3	Oil change service (fixed): every 10,000 km or 1 year	YES
	QI4	Oil change service (fixed): every 15,000 km or 1 year	YES
	QI7	Oil change service (fixed): every 10,000 mi or 1 year	YES

up! (12) 2013			
SERVICE INTERVALS			
From - to	**PR No.**	**Service events: Intervals**	**Indicated on service interval display (includes oil change)**
	QI1, QI2, QI3, QI4	Interval service (fixed): every 30,000 km or 2 years	YES
	QI1, QI2, QI3, QI4	Inspection service: after 3 years or max 60,000 km, then every 2 years or 60,000 km	NO

2.2.4 Service intervals as of model year 2014►

Scope of work	Climate and traffic conditions usual for passenger vehicles operated on fuels compliant with EN 228	For operation with fuels that are »NOT« compliant with standard EN 228 ⇒ page 22
Oil change service	---	QI1 every 5,000 km or 1 year (fixed) [1]
	---	QI2 every 7,500 km or 1 year (fixed) [1]
	---	QI3 every 10,000 km or 1 year (fixed) [1]
	QI4 every 15,000 km or 1 year (fixed) [1]	

[1] Whichever occurs first.

Scope of work	Climate and traffic conditions usual for passenger vehicles operated on fuels compliant with EN 228 or EN 590	For operation with fuels that are »NOT« compliant with standard EN 228 ⇒ page 22
Inspection	---	QI1 every 10,000 km or 1 year [1]
	---	QI2 every 15,000 km or 1 year [1]
	---	QI3 every 10,000 km or 1 year [1]
	QI4 30,000 km or 2 years then every 30,000 km or 1 year [1]	QI4 every 15,000 km or 1 year [1]

[1] Whichever occurs first.

Scope of work	Climate and traffic conditions usual for passenger vehicles
Inspection	VI9 30,000 km or 2 years then every 30,000 km or 1 year [1]

[1] Whichever occurs first.

Scope of work	Climate and traffic conditions usual for passenger vehicles operated on fuels compliant with EN 228	For operation with fuels that are »NOT« compliant with standard EN 228 ⇒ page 22
Inspection with expanded scope • Applies only in conjunction with regular inspection	After 60,000 km or 3 years then every 60,000 km or 2 years [1]	After 30,000 km or 2 years or after 20,000 km or 2 years [1]

[1] Whichever occurs first.

2.2.5 Air filter

Scope of work	Climate and traffic conditions usual for passenger vehicles	Countries with high levels of dust ⇒ page 23
Air filter: cleaning housing and renewing filter element • Applies only to Polo (except for 1.0 TSI and 1.0 manifold injection) and up! with manifold injection	Every 60,000 km or 4 years [1]	Every 30,000 km or 2 years [1]
Air filter: cleaning housing and renewing filter element	Every 90,000 km or 6 years [1]	Every 30,000 km or 2 years [1]

[1] Whichever occurs first.

2.2.6 Dust and pollen filter

Scope of work	Climate and traffic conditions usual for passenger vehicles	Countries with high levels of dust ⇒ page 23
Dust and pollen filter (cabin filter): renew. • Applies only to Polo and up!	Every 30,000 km or 2 years [1]	Max. 1 year or 30,000 km [1]
Dust and pollen filter (cabin filter): renew.	Every 60,000 km or 2 years [1]	Max. 1 year or 30,000 km [1]

[1] Whichever occurs first.

2.2.7 Panoramic sliding sunroof

Scope of work	Climate and traffic conditions usual for passenger vehicles	Countries with high levels of dust ⇒ page 23
Panoramic sliding sunroof • With colourless special lubricant: in countries with low dust levels, check only function and noise. In countries with high dust levels, the panorama sliding roof must continue to be cleaned and lubricated.	---	Max. 1 year or 15,000 km [1]
Panoramic sliding sunroof • If the lubricating paste is grey, clean and grease guide rails and clean wind deflector.	After 60,000 km or 3 years then every 60,000 km or 2 years [1]	Max. 1 year or 15,000 km [1]

1) Whichever occurs first.

2.2.8 Water drain valves at rear

Scope of work	Climate and traffic conditions usual for passenger vehicles	Countries with high levels of dust ⇒ page 23
Water drain valves at rear: check for blockage, clean if necessary • Applies as of model year 2014	Max. 2 years or 30,000 km 1)	Max. 1 year or 15,000 km 1)

1) Whichever occurs first.

2.2.9 Toothed belt

Scope of work	Climate and traffic conditions usual for passenger vehicles	Countries with high levels of dust ⇒ page 23
Toothed belt and camshaft drive tensioning roller: renew. • Applies only to TDI bi-turbo	Every 120,000 km	Every 120,000 km
Toothed belt and camshaft drive tensioning roller: renew. • Applies to all diesel engines with toothed belt	Every 210,000 km	Every 120,000 km
Toothed belt and camshaft drive tensioning roller: renew. • Applies to all petrol engines with toothed belt	---	Every 120,000 km
Toothed belt drive for coolant pump: renew. • Applies to all petrol engines with toothed belt for coolant pump	---	Every 120,000 km

1) Whichever occurs first.

2.2.10 Poly V-belt

Scope of work	Climate and traffic conditions usual for passenger vehicles	Countries with high levels of dust ⇒ page 23
Poly V-belt: renewing	---	Every 60,000 km

2.2.11 Spark plugs

Scope of work	Petrol engine compliant with EN 228	E100	Petrol engine not compliant with EN 228 ⇒ page 24
Spark plugs: renewing	Every 60,000 km or 4 years 1)	Every 40,000 km or 4 years 1)	Every 30,000 km / 20,000 km or 2 years 1) and every 15,000 km / 10,000 km or 1 year 1)

Scope of work	Petrol engine compliant with EN 228	E100	Petrol engine not compliant with EN 228 ⇒ page 24
Spark plugs: renewing • Applies for all 6-cylinder engines	Every 90,000 km or 6 years [1]		

[1] Whichever occurs first.

2.2.12 Brake fluid

Scope of work	Climate and traffic conditions usual for passenger vehicles	Only for markets outside Europe and with fixed oil change intervals
Brake and clutch system: changing brake fluid	3 years after initial registration, then every 2 years	Every 2 years

2.2.13 Natural gas system

Scope of work	Interval
Natural gas system: inspect natural gas tank for corrosion and leakage. • Italy only	4 years after initial registration, then every 2 years
Natural gas filler connection and sealing cap: check condition, clean if necessary and check seal. • Italy only	4 years after initial registration, then every 2 years

2.2.14 Automatic gearbox

Scope of work	Climate and traffic conditions usual for passenger vehicles	Countries with hot climate ⇒ page 21	North American market
Automatic gearbox: change ATF.	---	Every 60,000 km	---
Automatic gearbox: change ATF.	---	---	Every 80,000 mi

2.2.15 Country-specific additional work dependent on time and mileage

Scope of work	Interval
Reducing agent (AdBlue®/DEF): replenishing • Only if requested by customer, and as a separate charge	At every service.
Dual clutch gearbox (DSG) 02E and 0D9: change gear oil and filter.	Every 60,000 km
Dual clutch gearboxes (DSG) 0DD, 0DL and 0BH: change gear oil.	Every 60,000 km
Dual clutch gearbox (DSG) 0GC: change gear oil.	Every 120,000 km
Diesel particulate filter: check.	At 180,000 km/210,000 km, then every 30,000 km
All-wheel drive coupling: changing oil	Every 3 years

Scope of work	Interval
Front differential lock: changing oil	Every 3 years
Natural gas system: inspect natural gas tank for corrosion and leakage. • Europe only (except for Italy)	3 years after initial registration, then every 2 years
Natural gas filler connection and sealing cap: check condition, clean if necessary and check seal. • Europe only (except for Italy)	3 years after initial registration, then every 2 years
Reducing agent (AdBlue®/DEF): changing • Applies only to vehicles driven less than 15,000 km in 4 years	Every 4 years
Natural gas tank: renew.	Every 20 years

3 General information

3.1 General warnings for working on high-voltage system

⇒ Electric drive; Rep. gr. 00 ; Classification of dangers of the high-voltage system

3.2 Raising vehicle with lifting platform or trolley jack

Safety notes ⇒ page 15

Lifting points for lifting platform or trolley jack ⇒ page 16

3.2.1 Safety notes:

WARNING

- *Before driving onto a lifting platform, ensure that there is sufficient clearance between low-lying components and lifting platform.*
- *Before driving a vehicle onto a lifting platform it must be ensured that the vehicle weight does not exceed the permissible lifting capacity of the platform.*
- *To avoid damage to the underbody and prevent the vehicle from tipping over, ensure that the vehicle is only lifted at the indicated jacking points.*
- *Never start engine and engage a gear with vehicle lifted as long as even one driven wheel has contact with the floor! Disregarding these warnings risks the danger of an accident!*
- *If work is to be performed under vehicle, it must be supported by suitable jack stands.*

3.2.2 Lifting points for lifting platform or trolley jack:

Front lifting point

– Position support plate in area of side member marking at vertical reinforcement of floor pan -arrow-.

> ⚠ **WARNING**
>
> *Ensure that side member reinforcement seats centrally on support plate of hoist mounting.*

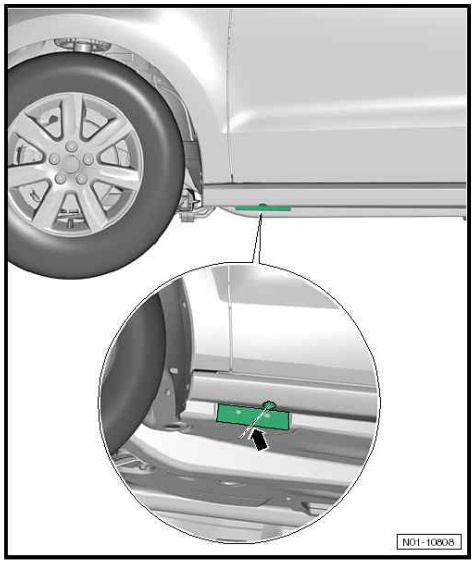

Rear lifting point

– Position support plate in area of side member marking at vertical reinforcement of floor pan -arrow-.

> ⚠ **WARNING**
>
> *Ensure that side member reinforcement seats centrally on support plate of hoist mounting.*

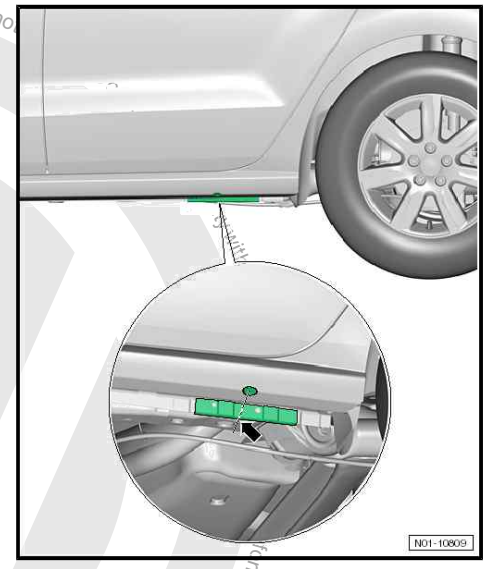

3.3 Stickers

In this chapter there are stickers which apply for the German market. The stickers determined for your country can be obtained from your importer.

Attach “Your next service” sticker ⇒ page 17 .

3.3.1 Attaching “Your next service” sticker:

– Service sticker “Your next service”: Enter a cross in position for next oil change service or inspection service (next service due) and enter date and odometer reading.

– Service sticker “Your next service”: Enter a cross in position for next oil change service or inspection service or legal check such as legislative inspection or gas system check (next service due) and enter date and mileage.

Service intervals ⇒ page 4

– Attach sticker to driver side door pillar (B-pillar) -arrow-.

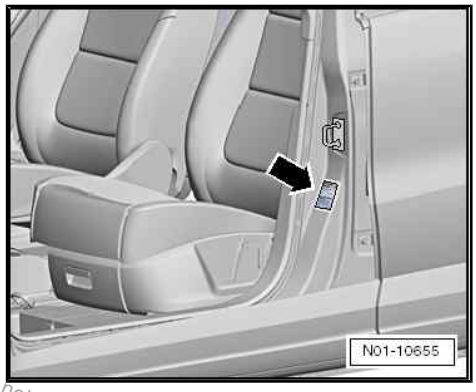

3.4 Entries in service schedule

If a component is changed which has a change interval prescribed by the manufacturer, e.g. the toothed belt, the new change interval begins at the time the component is changed.

- Therefore it is very important, every time a component is changed, to document this in the service schedule.
- This also applies to components which were changed before the regular change interval.

3.5 Vehicle diagnostic tester

Connect vehicle diagnostic tester. ⇒ page 17

3.5.1 Connecting vehicle diagnostic tester

Special tools and workshop equipment required

- Diagnosis system - VAS 6160 A-

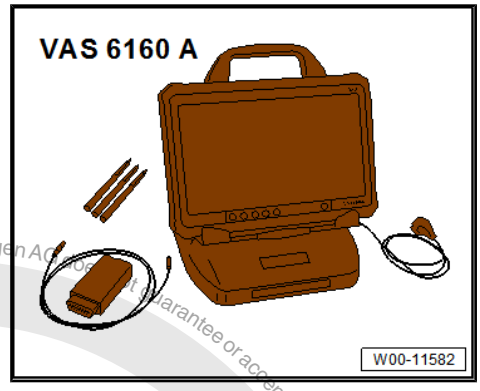

- Diagnosis system VCI - VAS 6150 C-

Note

Ensure that the selected vehicle diagnostic tester is used only with the respective diagnostic cable.

WARNING

- ***Always secure testing and measuring equipment on the rear seat during a road test.***
- ***Only a passenger may operate these devices while the vehicle is in motion.***

– Perform the following procedure:
– Connect diagnostic line connector to diagnostic connection.
– Switch on vehicle diagnostic tester .
– Switch on ignition.

Now follow instructions on screen in order to start desired functions.

3.6 Vehicle identification number

- Vehicle identification number on lower edge of windscreen ⇒ page 19
- Vehicle identification number on suspension strut turret ⇒ page 19
- Significance of vehicle identification number ⇒ page 19

Location engine compartment

3.6.1 Vehicle identification number on lower edge of windscreen

The vehicle identification number -arrow- is secured on the left-hand side of the vehicle in the windscreen near the wiper mounting. It is visible from the outside.

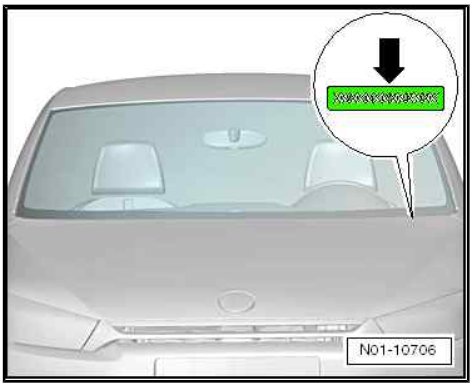

3.6.2 Vehicle identification number on suspension strut turret

The vehicle identification number is located on the suspension strut turret -arrow- on the right.

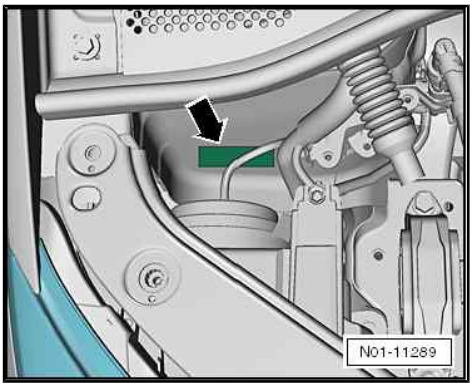

3.6.3 Significance of vehicle identification number

WVW	ZZZ	AA	Z	C	The guide	000 234
Manufacturer code	Filler characters	Model	Filler characters	Model year 2012	Production location	Serial number

3.7 Vehicle data sticker

3.7.1 “Vehicle data sticker”: attaching to service schedule or owner’s manual

– Apply the lower of the two vehicle data stickers -arrow- in the service schedule or the owner's manual.

In markets with digital service schedules (DSP), the place to paste the vehicle date sticker has moved from the service schedule to the owner's manual.

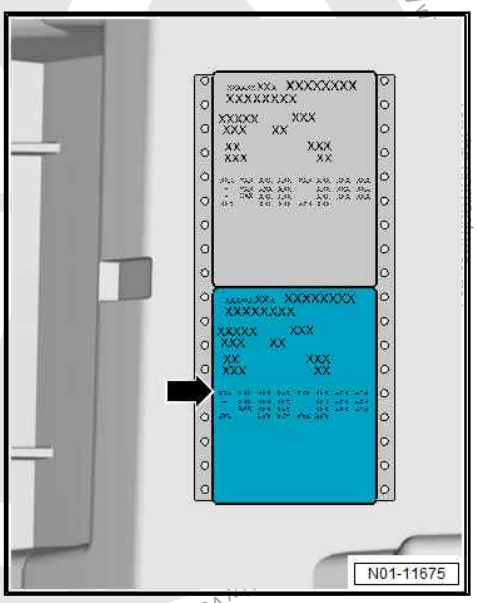

3.7.2 Vehicle data sticker

The vehicle data sticker -arrow- is located in rear of vehicle on the left in spare wheel recess. The vehicle data sticker is also found in the service schedule for the customer.

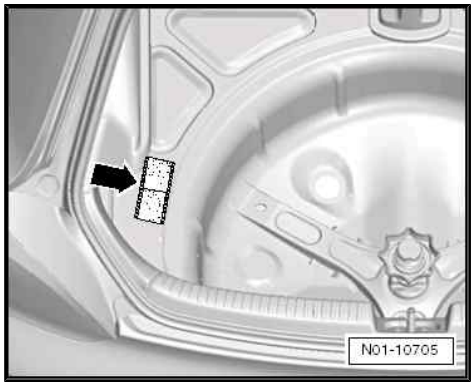

The sticker contains the following data of the vehicle

1 - Vehicle identification number

2 - Vehicle type, engine output, gearbox

3 - Engine and gearbox codes, paint number, interior equipment

4 - Optional equipment, PR numbers

The sticker in service schedule or owner's manual includes the same data. The key can be found under the sticker.

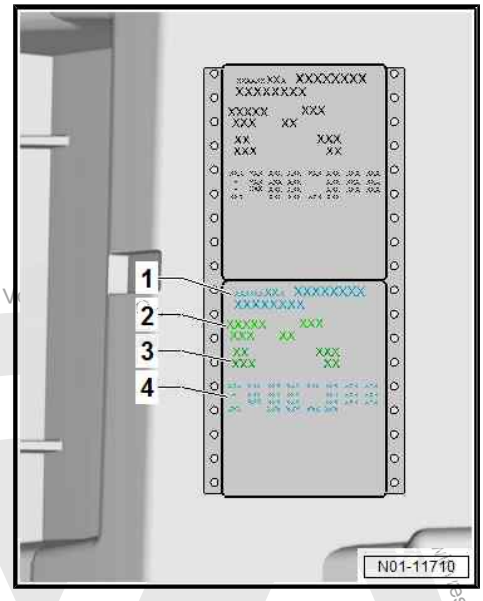

3.8 Severe operating conditions

If the vehicle is used under severe operating conditions some work will have to be performed before the next service is due or at shorter service intervals.

- Regular short trips or stop and go operation in urban traffic
- High percentage of cold starts
- Vehicle is used in areas with winter temperatures over a long period
- Regular long periods of idling (e.g. taxis)
- Vehicle is often driven at full throttle with high payload or whilst towing a trailer
- Using diesel with elevated sulphur content
- Regular operation in areas with high levels of dust
- Countries with generally poor road conditions such as high number of potholes, protrusions, high elevations in the road/ deep “tramlines”.
- High number of gravel roads with poor surface quality, such as irregularities/bumps, elevations, protruding stones, waves.
- Subtropical climates (combination of high ambient temperature and high air humidity)

3.9 Countries with hot climate

- Countries with hot and super hot climates have elevated peak temperatures (50°C) compared with the European average (25°C).
- Locally high ambient temperatures have an influence on the longevity of the engine, gearbox and coolant circuit, such as journeys uphill and at higher speeds as well as start/stop operation.

Australia	Qatar	USA
Abu Dhabi	Lebanon	United Arab Emirates
Algeria	Libya	West Sahara
Egypt	Liberia	Zimbabwe
Afghanistan	Mexico	Central African Republic
Angola	Malaysia	
Equatorial Guinea	Mauritius	
Ethiopia	Morocco	
Bahrain	Madagascar	
Brunei	Mali	
Benin	Mozambique	
Burkina Faso	Malawi	
Botswana	Mauritania	
Burundi	Nigeria	
China	Niger	
Dubai	Oman	
Democratic Republic of the Congo	Puerto Rico	
Djibouti	Palestine	
Ivory Coast	Pakistan	
Eritrea	Republic of Congo	
Gabon	Rwanda	
Gambia	Saudi Arabia	
Ghana	Singapore	
Guinea	Senegal	
Guinea-Bissau	Sudan	
Iran	Zambia	
India	South Sudan	
Indonesia	Sierra Leone	
Iraq	Somalia	
Israel	Syria	
Yemen	Thailand	
Jordan	Tunisia	
Kuwait	Togo	
Cameroon	Tanzania	
Kenya	Uganda	

3.10 Country overview for petrol not compliant with EN 228

Examples in fuel inadequacies that can lead to shortened maintenance / exchange intervals:

- Petrol contaminated with diesel
- High sulphur content
- Poor boiling point / evaporation
- Metallic components / Octane Booster Additive
- Contaminants in petrol

Abu Dhabi	Georgia	Mauritius	Syria
Afghanistan	Ghana	Mexico	Tajikistan
Egypt	Guatemala	Mongolia	Taiwan
Algeria	Guinea	Mozambique	Tanzania
Angola	Guinea-Bissau	Myanmar (Burma)	Thailand
Equatorial Guinea	Haiti	Nepal (Indian subcontinent)	Togo
Armenia	Honduras	New Caledonia	Trinidad and Tobago
Azerbaijan	India	Nicaragua	Chad
Ethiopia	Indonesia	Dutch Overseas Territories	Tunisia
Bahamas	Iraq	Niger	Turkey
Bahrain	Iran	Nigeria	Turkmenistan
Bangladesh	Jamaica	North Korea	Uganda
Belize	Yemen	Oman	Ukraine
Benin (Dahomey)	Jordan	Pakistan	Uruguay
Bermudas	Cameroon	Panama	Uzbekistan
Bhutan	Cape Verde	Papua New Guinea	Venezuela
Bolivia	Caribbean, left-hand traffic	Paraguay	United Arab Emirates
Brunei	Kazakhstan	Peru	Vietnam
Burkina Faso (Upper Volta)	Qatar	Philippines	West Sahara
Burundi	Kenya	Republic of Congo	Central African Republic
Chile	Kyrgyz Republic	Rwanda	Macao
China	Columbia	Russian Federation	Libya
Costa Rica	Cuba	Zambia	
Democratic Republic of the Congo	Kuwait	Saudi Arabia	
Djibouti	Laos	Senegal	
Dominican Republic	Lebanon	Seychelles	
Dubai	Liberia	Sierra Leone	
Ecuador	Madagascar	Singapore	
El Salvador	Malawi	Somalia	
Ivory Coast	Maldives	Sri Lanka	
Eritrea	Malaysia	South Sudan	
Fiji	Mali	Zimbabwe	
Gabon	Morocco	Sudan	

Gambia	Mauritania	Suriname	

3.11 Engine code and engine number

Engine code and engine number are located:

- On vehicle data sticker ⇒ page 19 .
- On type plate

Or

⇒ Rep. gr. 00 ; Identification; Engine number, engine data

3.12 Countries with high levels of dust

- High dust content in the air due to road and environmental conditions.
- Dust is categorised according to particle size or type of dust (organic and inorganic material) such as e.g. pollen, bacteria, fungal spores or rock dust, mineral fibres.

Abu Dhabi	Gabon	Macau	Somalia
Afghanistan	Gambia	Madagascar	Sri Lanka
Egypt	Georgia	Malawi	Seychelles
Algeria	Ghana	Maldives	South Sudan
Angola	Guatemala	Mali	Sudan
Equatorial Guinea	Guinea	Morocco	Suriname
Argentina	Guinea-Bissau	Mauritania	Swaziland
Armenia	Guyana	Mauritius	Syria
Azerbaijan	Honduras	Mexico	Tajikistan
Ethiopia	Hong Kong	Mongolia	Tanzania
Australia	India	Mozambique	Thailand
Bahrain	Indonesia	Myanmar (Burma)	Togo
Bangladesh	Iraq	Namibia	Chad
Belize	Israel	Nepal (Indian subconti-nent)	Tunisia
Benin (Dahomey)	Yemen	Nicaragua	Turkey
Bhutan	Jordan	Niger	Turkmenistan
Bolivia	Cambodia	Nigeria	Uganda
Botswana	Cameroon	North Korea	Uruguay
Brazil	Cape Verde	Oman	Ukraine
Brunei	Kazakhstan	Pakistan	Uzbekistan
Burkina Faso (Upper Vol-ta)	Qatar	Palestine	Venezuela
Chile	Kenya	Panama	United Arab Emirates
China	Kyrgyz Republic	Papua New Guinea	Vietnam
Costa Rica	Columbia	Paraguay	West Sahara
Democratic Republic of the Congo	Cuba	Peru	Central African Republic
Djibouti	Kuwait	Puerto Rico	
Dominican Republic	Laos	Rwanda	
Dubai	Lesotho	Russian Federation	
Ecuador	Lebanon	Zambia	

El Salvador	Liberia	Saudi Arabia	
Ivory Coast	Libya	Senegal	
Eritrea	Philippines	Sierra Leone	
French Guyana	Burundi	Zimbabwe	
Fiji		South Africa	

3.13 Identification plate

Note

Vehicles for certain export countries have no type plate.

The type plate -A- is visible in lower area of B-pillar when the left front door is open.

The type plate includes the following vehicle data:

A - Vehicle identification number

B - Variable indications e.g. axle loads, gross vehicle weight rating, gross combination weight

C - Model identification number

D - Engine code

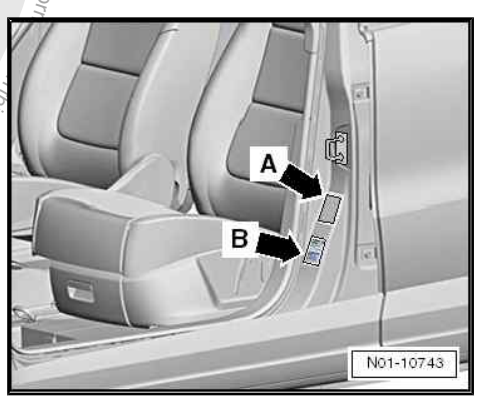

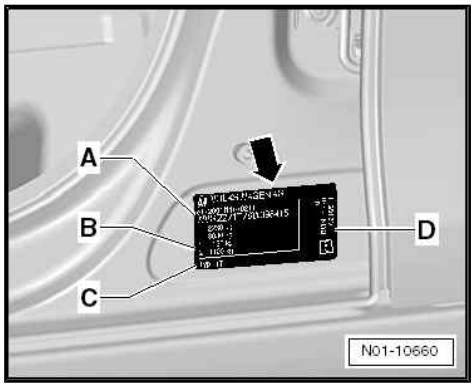

3.14 Shortened intervals for spark plug replacement

Shortened spark plug replacement intervals are necessary if fuel not compliant with DIN EN 228 are used.

Examples in fuel inadequacies that can lead to shortened maintenance / exchange intervals:

- Petrol contaminated with diesel
- High sulphur content
- Poor boiling point / evaporation
- Metallic components / Octane Booster Additive
- Contaminants in petrol

Country				
	30,000 km / 2 years	20,000 km / 2 years	15,000 km /1 year	10,000 km /1 year
Abu Dhabi	X			

Country	30,000 km / 2 years	20,000 km / 2 years	15,000 km /1 year	10,000 km /1 year
Afghanistan	X			
Egypt	X			
Algeria				X
Angola				X
Equatorial Guinea				X
Armenia	X			
Azerbaijan	X			
Ethiopia				X
Bahamas	X			
Bahrain	X			
Bangladesh	X			
Belize			X	
Benin (Dahomey)				X
Bermudas	X			
Bhutan	X			
Bolivia	X			
Brunei	X			
Burkina Faso (Upper Volta)				X
Burundi				X
Chile	X			
China		X		
Costa Rica	X			
Democratic Republic of the Congo				X
Djibouti				X
Dominican Republic	X			
Dubai	X			
Ecuador	X			
El Salvador	X			
Ivory Coast				X
Eritrea				X
Fiji	X			
Gabon				X
Gambia				X
Georgia	X			
Ghana				X
Guatemala	X			
Guinea				X
Guinea-Bissau				X
Haiti	X			
Honduras	X			
India	X			
Indonesia	X			
Iraq	X			
Iran			X	

Country	30,000 km / 2 years	20,000 km / 2 years	15,000 km /1 year	10,000 km /1 year
Jamaica	X			
Yemen	X			
Jordan	X			
Cameroon				X
Cape Verde				X
Caribbean, left-hand traffic	X			
Kazakhstan	X			
Qatar	X			
Kenya				X
Kyrgyz Republic			X	
Columbia	X			
Cuba	X			
Kuwait	X			
Laos	X			
Lebanon	X			
Liberia				X
Libya		X		
Macao				X
Madagascar				X
Malawi				X
Malaysia	X			
Mali				X
Morocco		X		
Mauritania				X
Mauritius				X
Mexico	X			
Mongolia	X			
Mozambique				X
Myanmar (Burma)	X			
Nepal (Indian sub-continent)	X			
Nicaragua	X			
Netherlands overseas territories Aruba, Curacao, Sint-Maarten (Dutch)	X			
Niger				X
Nigeria				X
North Korea			X	
Oman	X			
Pakistan			X	
Panama	X			
Papua New Guinea	X			
Paraguay	X			
Peru	X			
Philippines	X			

Country				
	30,000 km / 2 years	20,000 km / 2 years	15,000 km /1 year	10,000 km /1 year
Republic of Congo				X
Rwanda				X
Russian Federation	X			
Zambia				X
Saudi Arabia	X			
Senegal				X
Seychelles				X
Sierra Leone				X
Singapore	X			
Somalia				X
Sri Lanka	X			
South Sudan				X
Sudan				X
Suriname				X
Syria			X	
Tajikistan	X			
Taiwan	X			
Tanzania				X
Thailand	X			
Togo				X
Trinidad and Tobago			X	
Chad				X
Tunisia			X	
Turkey	X			
Turkmenistan	X			
Uganda				X
Ukraine	X			
Uruguay	X			
Uzbekistan	X			
Venezuela	X			
United Arab Emirates	X			
Vietnam	X			
West Sahara				X
Central African Republic				X
Zimbabwe				X

4 Descriptions of work:

4.1 Swivel joints and suspension link mountings: inspecting

– Check boots -arrow- of upper swivel joints for leaks and damage.

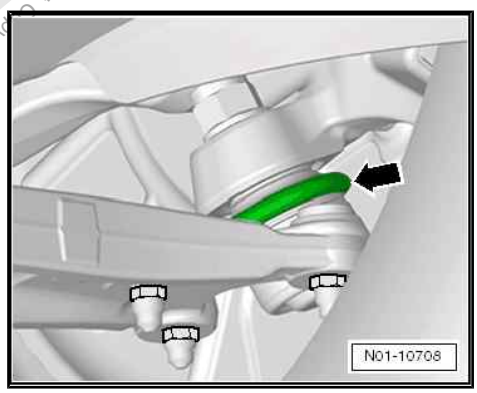

– Check also suspension link mountings -arrow- for following damage:

♦ Large cracks, perforating cracks or cuts in rubber material.

♦ Complete separation of rubber and metal parts.

♦ Large play between mounting and suspension link, which has a considerably negative effect on the function of the mounting.

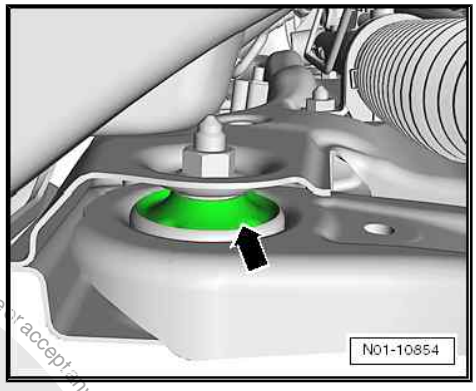

Note

♦ *Superficial cracks and cuts as well as minor separations of the rubber element from the metal part do not significantly affect the operation of the elasto-kinematic mounting and do not constitute a basis for a complaint.*

♦ *Damage to the thin rubber skin over cavities due to construction is also permissible.*

♦ *Play between bearing and axle component is permissible as long as there is no negative effect on the function of the bearing.*

4.2 Front passenger front airbag: checking key switch and “ON/OFF function”

Note

The “Airbag ON/OFF” switch is in the dashboard on the front passenger side.

Front passenger front airbag: check key switch and “ON/OFF function”.

– Using the ignition key, turn switch to position “AIRBAG OFF”.

– Switch on ignition.

– Warning lamp “PASSENGER AIRBAG OFF” -arrow- must also light up after self-test (passenger airbag deactivated).

– Switch off ignition.

– Using ignition key, turn switch to position “AIRBAG ON”.
– Switch on ignition.

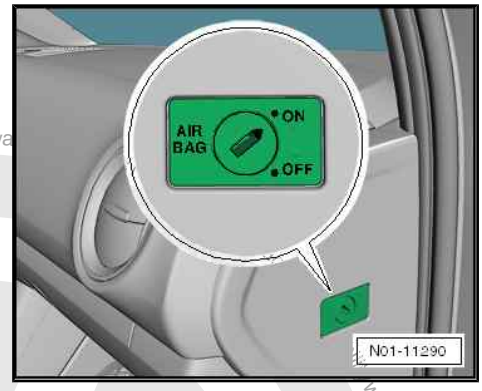

– Warning lamp “PASSENGER AIRBAG OFF” -arrow- goes out after self-test (passenger airbag activated).
– Switch off ignition.

4.3 Battery (12V): checking battery terminal clamps for secure seating

Battery in engine compartment ⇒ page 32

Special tools and workshop equipment required

♦ Torque wrench - V.A.G 1331-

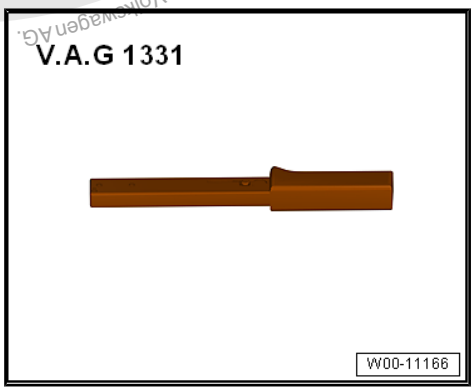

Note

♦ *A securely seated battery terminal clamp ensures trouble free function and long service life of the battery.*

♦ *When securing terminal clamp, ensure that it is completely seated on battery terminal.*

4.3.1 Battery in engine compartment

Perform the following procedure:

– Check whether battery terminal clamps are secure on battery terminals by moving battery positive cable and battery negative cable back and forth.

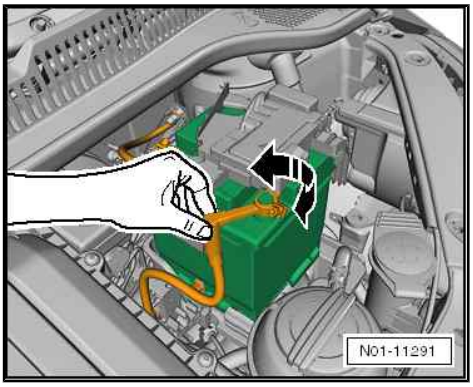

WARNING

If the battery terminal clamp is not seated securely on the battery positive terminal, first disconnect battery terminal clamp on battery negative terminal to prevent possible accidents.

If the battery terminal clamp is NOT seated securely on positive terminal:

– Loosen the -NEGATIVE- battery terminal clamp and remove.

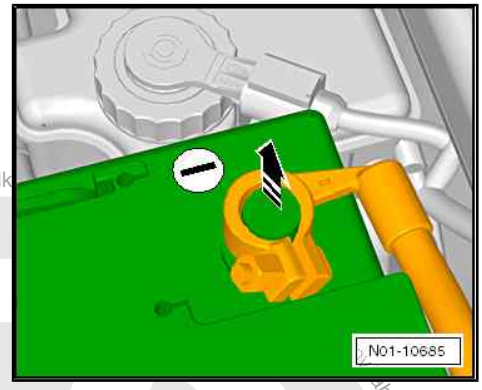

– Tighten -POSITIVE- battery terminal clamp to specified torque using torque wrench - V.A.G 1331- and ratchet - V.A.G. 1331/1- .

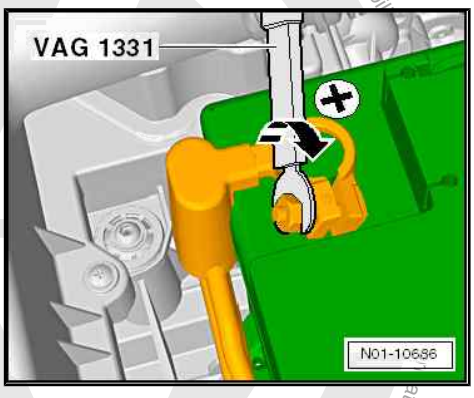

– Reconnect -NEGATIVE- battery terminal clamp and tighten it to specified torque using torque wrench - V.A.G 1331- and ratchet - V.A.G. 1331/1- .

If battery terminal clamp is NOT seated securely on negative terminal:

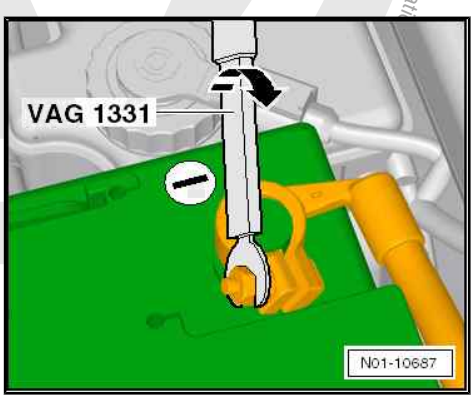

– Tighten -NEGATIVE- battery terminal clamp on battery terminal to specified torque using torque wrench - V.A.G 1331- and ratchet - V.A.G. 1331/1- .

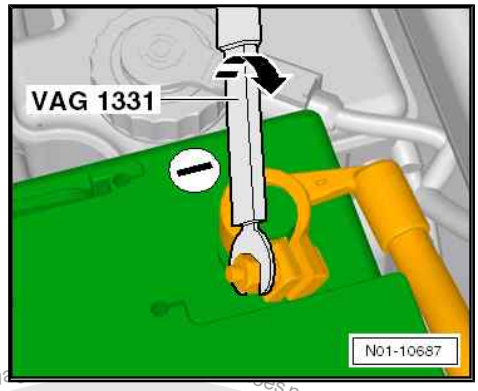

Specified torque	Nm
Nut for battery terminal	6

Carry out following procedures after connecting battery:

Procedure

⇒ Electrical system; Rep. gr. 27 ; Battery; Disconnecting and connecting battery

4.4 Battery (12V): checking using battery tester with printer VAS 6161

Procedure

⇒ Electrical system, General information; Rep. gr. 27 ; Checking battery

4.5 Tyres: checking condition, wear pattern, tyre pressure and tread depth

Checking condition of tyre ⇒ page 35 .

Checking wear pattern ⇒ page 35

Tread depth (including spare wheel): check ⇒ page 35 .

General notes ⇒ page 36

Tyre pressures, up! ⇒ page 37

Tyre pressures, e-up! ⇒ page 42

Special tools and workshop equipment required

♦ Tyre inflator - VAS 5216-

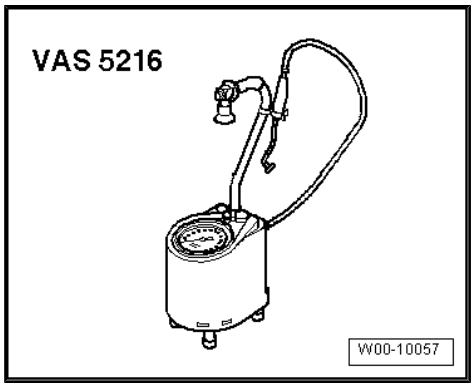

4.5.1 Tyres: checking condition

WARNING

If damage is determined, always check to see if a new tyre should be fitted.

Tests at delivery inspection

– Check tyre side walls and treads for damage and foreign bodies such as, for example, nails or glass splinters.

Tests at service

– Check tyre side walls and treads for damage and foreign bodies such as, for example, nails or glass splinters.

– Check tyres for cupping, one-sided wear, porous side walls, cuts and punctures.

– Check for appropriate direction of rotation, or make sure that the inner and outer sides have not been interchanged.

4.5.2 Wear pattern: checking

The wear pattern on the front tyres will indicate, for example, if toe and camber settings should be checked:

- Feathering on tread indicates incorrect toe setting.
- One-sided tread wear is mainly attributed to incorrect camber.

When wear of this nature is detected, determine cause by checking alignment (repair measure).

4.5.3 Tyre tread depth (including spare wheel): checking

– Check tyre tread depth.

Minimum tread depth: 1.6 mm

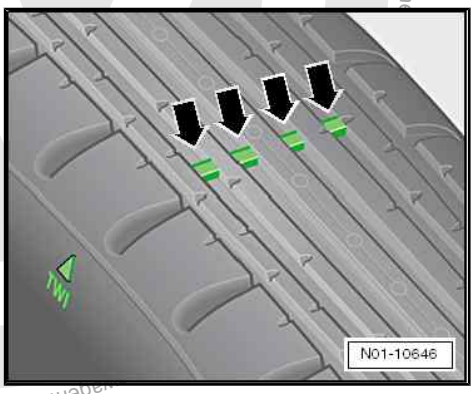

Note

- *This figure may vary according to legislation in individual countries. Your importer will inform you about this.*
- *The minimum tread depth is reached when the tyres have worn down level with the 1.6 mm high tread wear indicators -arrows- positioned at intervals around the tyre.*
- *If the tread depth is approaching the minimum allowed depth, inform the customer.*

4.5.4 General information

WARNING

- *For safety reasons, only tyres of same type and tread pattern should be fitted on a vehicle! For approved wheel and tyre combinations refer to e.g. ⇒ Wheels and Tyres Guide; Rep. gr. 44 ; Wheel and tyre combinations .*
- *On vehicles with four-wheel drive, tyres of the same type and tread pattern must be used. Otherwise the centre differential may be damaged.*

Note

- *Tyre pressures for the relevant model can also be found on a sticker. It is attached to the inside of tank flap or to B-pillar.*
- *The pressures on the sticker apply to cold tyres. Do not reduce increased pressures of warm tyres.*
- *Depending on the vehicle, the sticker may also contain information on the comfort tyre pressure. The comfort tyre pressure facilitates improved driving comfort.*
- *Driving with comfort tyre pressure may result in an increased fuel consumption.*
- *Adjust the tyre pressure to suit the vehicle load. For delivery inspections or repairs, the partial load tyre pressure is to be used.*
- *If no inflation pressure is shown for the spare wheel, then inflate the spare wheel to the highest inflation pressure for the vehicle.*
- *Please note that the basic setting should be performed on vehicles with Tyre Pressure Loss Indicator after every pressure change.*

M+S tyres

Note

- *Important information on recommended winter tyres can be found in:*
- *⇒ Wheels and tyres guide; Rep. gr. 44 ; Wheels, tyres, vehicle geometry; Wheel and tyre combinations*
- *If winter tyres are fitted, a sticker, visible for the customer and indicating the speed limit, must be applied in the interior of the vehicle.*
- *For winter tyres, the tyre pressure does not have be increased. However, this only applies if the winter tyre used corresponds exactly to the standard summer tyre size and the speed index is no higher than "H". If this is not the case, please refer to the recommendation of the tyre manufacturer.*

4.5.5 Tyre pressures, up!

Note

- *During delivery inspection, check that tyre inflation pressure sticker is fitted. If the sticker is missing, order a new sticker through ETKA.*
- *The mandatory tyre pressures for the respective model can be found on a sticker attached to the inside of tank flap or to the B-pillar.*
- *If the inflation pressure sticker is missing, proceed as follows:*
- *Locate correct part number for respective vehicle in ETKA.*
- *Using part number, determine respective inflation pressures in tyre inflation table.*
- *Uniform pressure: if tyre sizes are not shown for a part number, then a uniform pressure is valid for all authorised wheel/tyre combinations. ⇒ Wheels and tyres guide; Rep. gr. 44 ; Wheels, tyres, vehicle geometry; Wheel and tyre combinations*

Check tyre pressure using tyre inflator - VAS 5216- , correct if necessary.

Part number - 1S0 010 717 E-	up!			
Part number - 1S0 010 800 E-				
Part number - 1S0 010 000-				
Part number - 1S0 010 000 B-				
Part number - 1S0 010 000 D-				
Part number - 1S0 010 000 L-				
	Half payload kPa/bar/psi		Full payload kPa/bar/psi	
Tyre size	**Front**	**Rear**	**Front**	**Rear**
All [1]	200/2.0/29	180/1.8/26	220/2.2/32	250/2.5/36

[1] Valid for all authorised wheel/tyre combinations. ⇒ Wheels and tyres guide; Rep. gr. 44 ; Wheels, tyres, vehicle geometry; Wheel and tyre combinations

Part number - 1S0 010 823 R-	up!			
Part number - 1S0 010 823 P-				
	Half payload kPa/bar/psi		Full payload kPa/bar/psi	
Tyre size	**Front**	**Rear**	**Front**	**Rear**
All [1]	200/2.0/29	200/2.0/29	220/2.2/32	260/2.6/38

[1] Valid for all authorised wheel/tyre combinations. ⇒ Wheels and tyres guide; Rep. gr. 44 ; Wheels, tyres, vehicle geometry; Wheel and tyre combinations

Part number - 1S0 010 833 B-	up!			
Part number - 1S0 010 833-				
Part number - 1S0 010 000 C-				
Part number - 1S0 010 000 E-				
	Half payload kPa/bar/psi		Full payload kPa/bar/psi	
Tyre size	**Front**	**Rear**	**Front**	**Rear**
165/70 R14	230/2.3/33	210/2.1/30	230/2.3/33	250/2.5/36
175/65 R14				
185/55 R15	200/2.0/29	180/1.8/26	220/2.2/32	250/2.5/36
185/50 R16				

Part number - 1S0 010 816 N-	up!			
	Half payload kPa/bar		Full payload kPa/bar	
Tyre size	**Front**	**Rear**	**Front**	**Rear**
165/70 R14 81T	200/2.0	180/1.8	220/2.2	250/2.5
175/65 R14 82T				
185/55 R15 82T				
185/50 R16 81T/H				
Spare wheel	260/2.6			

Part number - 1S0 010 823 Q-	up!			
	Half payload kPa/bar		Full payload kPa/bar	
Tyre size	**Front**	**Rear**	**Front**	**Rear**
165/70 R14 81T	200/2.0	200/2.0	220/2.2	260/2.6
175/65 R14 82T				
185/55 R15 82T				
185/50 R16 81T/H				
Spare wheel	260/2.6			

Part number - 1S0 010 833 C-	up!			
Part number - 1S0 010 000 G-				
Part number - 1S0 010 000 M-				
	Half payload kPa/bar		Full payload kPa/bar	
Tyre size	**Front**	**Rear**	**Front**	**Rear**
165/70 R14 81T	230/2.3	210/2.1	230/2.3	250/2.5
175/65 R14 82T				
185/55 R15 82T	200/2.0	180/1.8	220/2.2	250/2.5
185/50 R16 81T/H				
Spare wheel	260/2.6			

Part number - 1S0 010 851 E-	up!			
Part number - 1S0 010 851 F-				
Part number - 1S0 010 000 H-				
Part number - 1S0 010 000 J-				
Part number - 1S0 010 000 N-				
	Half payload kPa/bar/psi		Full payload kPa/bar/psi	
Tyre size	**Front**	**Rear**	**Front**	**Rear**
165/70 R14	230/2.3/33	230/2.3/33	230/2.3/33	260/2.6/38
175/65 R14				
185/55 R15	200/2.0/29	200/2.0/29	220/2.2/32	260/2.6/38
185/50 R16				

Part number - 1S0 010 000 A-	up!			
	Half load bar		Full load bar	
Tyre size	**Front**	**Rear**	**Front**	**Rear**
All [1]	2.0	1.8	2.2	2.5
Spare wheel	2.6			

[1] Valid for all authorised wheel/tyre combinations. ⇒ Wheels and tyres guide; Rep. gr. 44 ; Wheels, tyres, vehicle geometry; Wheel and tyre combinations

Part number - 1S0 010 000 K-	up!			
	Half payload kPa/bar		Full payload kPa/bar	
Tyre size	**Front**	**Rear**	**Front**	**Rear**
165/70 R14 81T	230/2.3	230/2.3	230/2.3	260/2.6
175/65 R14 82T				
185/55 R15 82T	200/2.0	200/2.0	220/2.2	260/2.6
185/50 R16 81T/H				
Spare wheel	260/2.6			

Part number - 1S0 010 000 F-	up!			
	Half payload kPa/bar		Full payload kPa/bar	
Tyre size	**Front**	**Rear**	**Front**	**Rear**
165/70 R14 81T	200/2.0	180/1.8	220/2.2	250/2.5
175/65 R14 82T				
185/55 R15 82T				
185/50 R16 81T/H				
195/40 R17 81V				
Spare wheel	260/2.6			

Part number - 1S0 010 842 J-	up!			
	Half load bar/psi		Full load bar/psi	
Tyre size	**Front**	**Rear**	**Front**	**Rear**
165/80 R13	2.3/33	2.3/33	2.3/33	2.5/36
175/70 R14				

Part number - 1S0 010 842 K-	up!			
	Half load bar/psi		Full load bar/psi	
Tyre size	**Front**	**Rear**	**Front**	**Rear**
175/70 R14	2.0/29	1.8/26	2.2/32	2.5/36

Part number - 1S0 010 850 R-	up!			
	Half load bar/psi		Full load bar/psi	
Tyre size	**Front**	**Rear**	**Front**	**Rear**
185/60 R15	2.0/29	1.8/26	2.2/32	2.5/36
(175/70 R14)	2.5/36			

Part number - 1S0 010 000 Q-	up!					
	Half payload kPa/bar/psi		Comfort tyre pressure kPa/bar/psi		Full payload kPa/bar/psi	
Tyre size	**Front**	**Rear**	**Front**	**Rear**	**Front**	**Rear**
All [1]	230/2.3/33	210/2.1/30	200/2.0/29	180/1.8/26	230/2.3/33	250/2.5/36

[1] Valid for all authorised wheel/tyre combinations. ⇒ Wheels and tyres guide; Rep. gr. 44 ; Wheels, tyres, vehicle geometry; Wheel and tyre combinations

Part number - 1S0 010 000 R-	up!					
	Half payload kPa/bar/psi		Comfort tyre pressure kPa/bar/psi		Full payload kPa/bar/psi	
Tyre size	**Front**	**Rear**	**Front**	**Rear**	**Front**	**Rear**
All [1]	230/2.3/33	230/2.3/33	200/2.0/29	200/2.0/29	230/2.3/33	260/2.6/38

[1] Valid for all authorised wheel/tyre combinations. ⇒ Wheels and tyres guide; Rep. gr. 44 ; Wheels, tyres, vehicle geometry; Wheel and tyre combinations

Part number - 1S0 010 000 S-	up!					
	Half payload kPa/bar/psi		Comfort tyre pressure kPa/bar/psi		Full payload kPa/bar/psi	
Tyre size	**Front**	**Rear**	**Front**	**Rear**	**Front**	**Rear**
All [1]	250/2.5/36	230/2.3/33	220/2.2/32	200/2.0/29	250/2.5/36	270/2.7/39

[1] Valid for all authorised wheel/tyre combinations. ⇒ Wheels and tyres guide; Rep. gr. 44 ; Wheels, tyres, vehicle geometry; Wheel and tyre combinations

Part number - 1S0 010 000 T-	up!					
	Half payload kPa/bar/psi		Comfort tyre pressure kPa/bar/psi		Full payload kPa/bar/psi	
Tyre size	**Front**	**Rear**	**Front**	**Rear**	**Front**	**Rear**
All [1]	260/2.6/38	240/2.4/35	230/2.3/33	210/2.1/30	260/2.6/38	280/2.8/41

[1] Valid for all authorised wheel/tyre combinations. ⇒ Wheels and tyres guide; Rep. gr. 44 ; Wheels, tyres, vehicle geometry; Wheel and tyre combinations

Part number - 1S0 010 000 AA-	up!			
	Half load bar/psi		Full load bar/psi	
Tyre size	**Front**	**Rear**	**Front**	**Rear**
185/60 R15	2.0/29	1.8/26	2.2/32	2.5/36
Spare wheel	2.5/36			

Part number - 1S0 010 000 AB-	up!					
	Half payload kPa/bar/psi		Comfort tyre pressure kPa/bar/psi		Full payload kPa/bar/psi	
Tyre size	**Front**	**Rear**	**Front**	**Rear**	**Front**	**Rear**
All [1]	270/2.7/39	240/2.4/35	240/2.4/35	220/2.2/32	270/2.7/39	290/2.9/42

[1] Valid for all authorised wheel/tyre combinations. ⇒ Wheels and tyres guide; Rep. gr. 44 ; Wheels, tyres, vehicle geometry; Wheel and tyre combinations

4.5.6 Tyre pressures, e-up!

Note

- *During delivery inspection, check that tyre inflation pressure sticker is fitted. If the sticker is missing, order a new sticker through ETKA.*
- *The mandatory tyre pressures for the respective model can be found on a sticker attached to the inside of tank flap or to the B-pillar.*
- *If the inflation pressure sticker is missing, proceed as follows:*
- *Locate correct part number for respective vehicle in ETKA.*
- *Using part number, determine respective inflation pressures in tyre inflation table.*
- *Uniform pressure: if tyre sizes are not shown for a part number, then a uniform pressure is valid for all authorised wheel/tyre combinations. ⇒ Wheels and tyres guide; Rep. gr. 44 ; Wheels, tyres, vehicle geometry; Wheel and tyre combinations*

Part number - 12E 010 000-	e-up!					
Part number - 12E 010 000 A-						
Part number - 12E 010 000 B-						
Part number - 12E 010 000 C-						
Part number - 12E 010 000 E-						
	Half payload kPa/bar/psi		Comfort tyre pressure kPa/bar/psi		Full payload kPa/bar/psi	
Tyre size	**Front**	**Rear**	**Front**	**Rear**	**Front**	**Rear**
All [1]	280/2.8/41	280/2.8/41	260/2.6/38	260/2.6/38	280/2.8/41	280/2.8/41

[1] Valid for all authorised wheel/tyre combinations. ⇒ Wheels and tyres guide; Rep. gr. 44 ; Wheels, tyres, vehicle geometry; Wheel and tyre combinations

Part number - 12E 010 000 D-	e-up!			
	Half load bar		Full load bar	
Tyre size	**Front**	**Rear**	**Front**	**Rear**
All [1]	2.8	2.8	2.8	2.8

[1] Valid for all authorised wheel/tyre combinations. ⇒ Wheels and tyres guide; Rep. gr. 44 ; Wheels, tyres, vehicle geometry; Wheel and tyre combinations

4.6 Brake and clutch system: changing brake fluid

WARNING

- *Never allow brake fluid to come into contact with fluids that contain mineral oils (e.g. oil, petrol, cleaning agents). Mineral oils will damage seals and rubber grommets of brake system.*
- *Brake fluid is poisonous. In addition, due to its corrosive nature, it must not come into contact with paint.*
- *Brake fluid is hygroscopic, which means it absorbs moisture from the ambient air and should therefore always be stored in air-tight containers.*
- *Rinse off spilled brake fluid using plenty of water.*
- *Observe relevant disposal regulations.*

Caution

- *For this vehicle only brake fluid VW 501 14 - B 000 750- must be used.*

Special tools and workshop equipment required

- Brake filling and bleeding equipment - VAS 5234-

- Brake filling and bleeding equipment - VAS 6860-

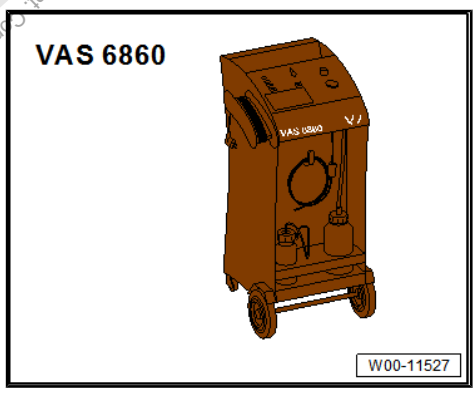

♦ Brake bleeding wrench - VAS 5519-

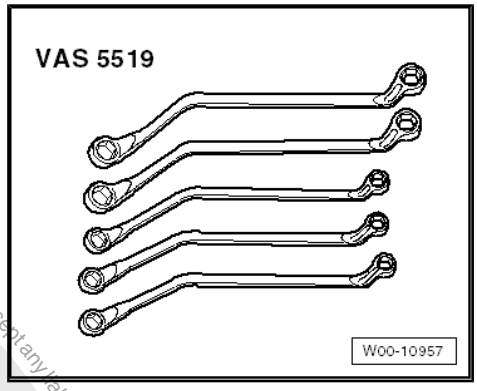

♦ Brake bleeding tool - VAS 6564-

Extracting brake fluid

– Unscrew cap -1- from brake fluid reservoir.

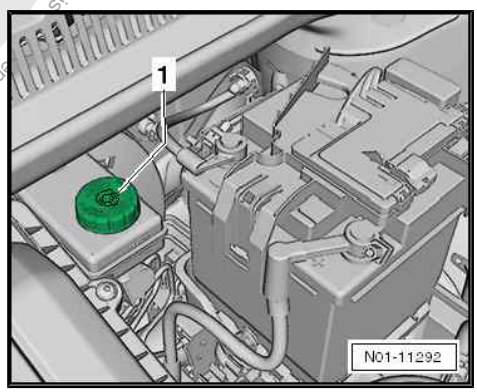

– Using the suction hose from brake filling and bleeding unit , extract as much brake fluid -2- from the brake fluid reservoir as possible through the strainer -1-.

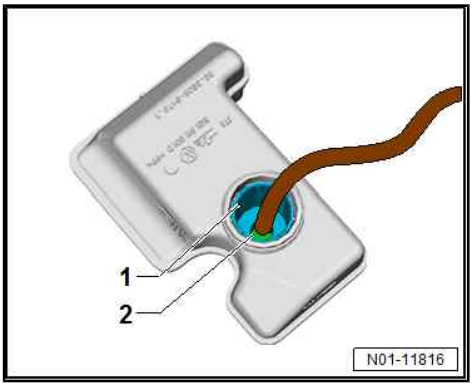

Note

- *The strainer in brake fluid reservoir must remain in place.*
- *Ensure that no brake fluid runs through the strainer after completing the extraction (the brake fluid level in the reservoir must be even with the lower edge of the strainer).*

Connecting brake filling and bleeding equipment

Note

- *The bleeder hose must be firmly seated on bleeder valve so that no air can enter the brake system.*
- *There must always be sufficient brake fluid in the brake reservoir so that no air can enter the brake system through the reservoir.*

– Screw adapter -1- onto brake fluid reservoir.

– Connect filler hose from brake filling and bleeding unit to adapter -1-.

– Set correct pressure on brake filling and bleeding equipment ⇒ Operating Manual , and switch on brake filling and bleeding equipment .

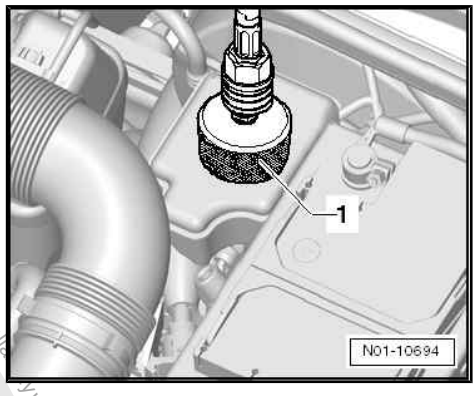

Front axle

– Remove the cover cap -1- from bleeder valve of front left brake caliper.

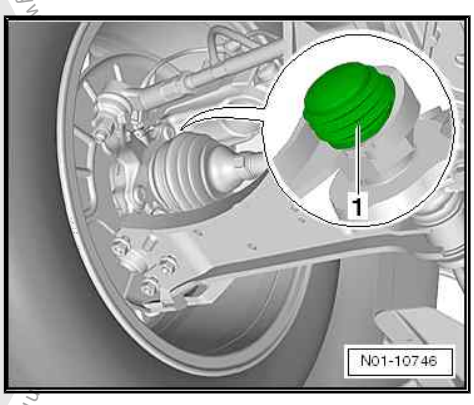

– Push collector bottle bleeder hose -1- onto front left bleeder valve, open bleeder valve and let appropriate quantity of brake fluid run out (see table). Close bleeder valve. Torque: ⇒ Brake systems; Rep. gr. 47 ; Front brake caliper; Assembly overview – front brake caliper

– Fit again cover cap on bleeder valve of front left brake caliper.

Repeat the procedure on front right of vehicle.

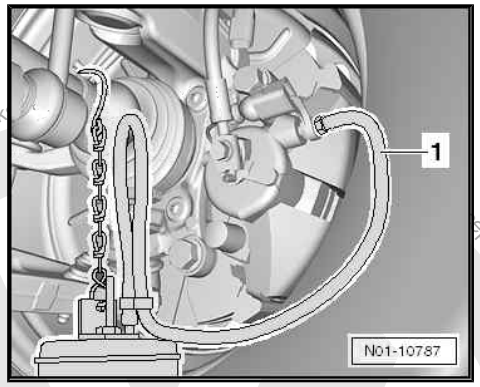

Rear axle

– Remove cover cap -arrow- from bleeder valve of rear left brake cylinder.

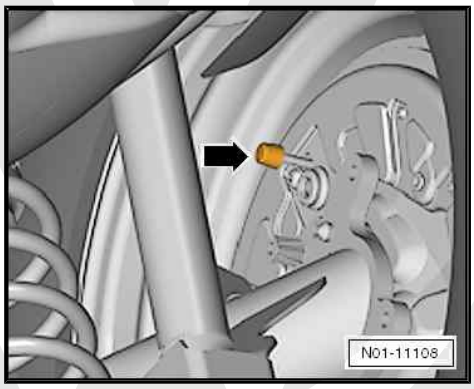

– Push collector bottle bleeder hose -1- onto rear left bleeder valve.

– Open bleeder valve and let appropriate quantity of brake fluid run out (see table). Close bleeder valve.

– Fit again cover cap on bleeder valve of rear left brake cylinder.

– Repeat procedure on rear right of vehicle.

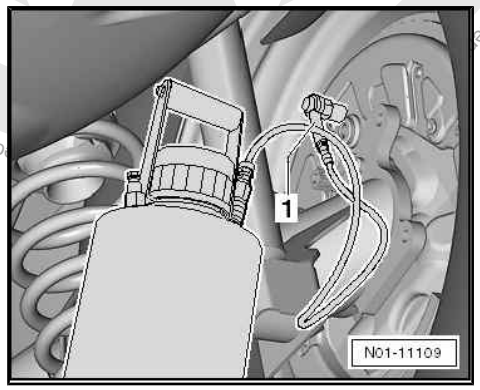

Clutch slave cylinder:

The clutch slave cylinder is bled without the battery console being removed.

Access is possible from below at the front on the left.

– Raise vehicle.

If necessary, the bleeder hose (670 mm long) - V.A.G 1238/B3- is to be used for bleeding.

– To do this, connect the bleeder hose to the collector bottle of the brake bleeding device.

– Push bleeder hose -arrow- onto bleeder valve.

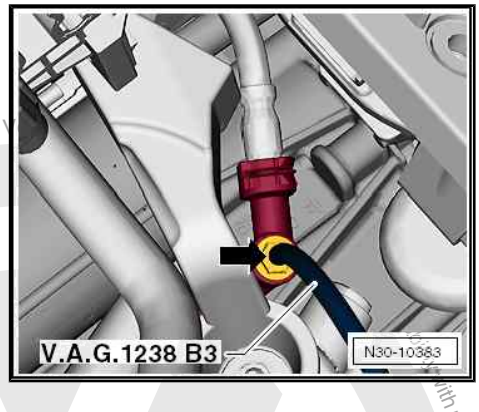

- Push brake bleeding tool - VAS 6564/4- onto bleeder valve and loosen with open-end spanner.
- Open bleeder valve.
- Allow approx. 100 ml of brake fluid to flow out.
- Close bleeder valve.
- Lower vehicle.
- Depress clutch pedal 10 to 15 times in quick succession.
- Raise vehicle.
- Open bleeder valve.
- Allow another 50 ml of brake fluid to flow out.
- Close bleeder valve.
- Remove bleeder hose.

Specified torque	Nm
Bleeder valve	4.5

- Depress clutch pedal several times after completion of bleeding process.
- Switch off brake filling and bleeding unit .
- Take filler hose off adapter.
- Unscrew adapter from brake fluid reservoir.
- Check the brake fluid level and correct it if necessary. It must be between position -1- and -2-.

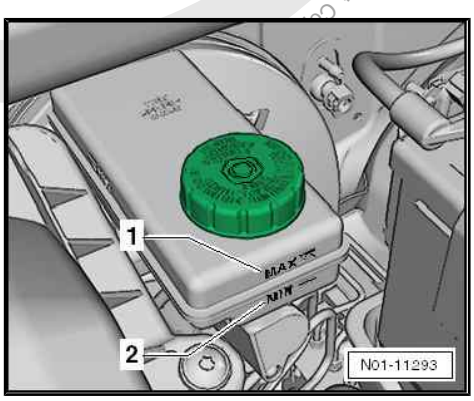

- Screw on cap -1- of brake fluid reservoir.
- Check function during road test.

Sequence and quantity of brake fluid

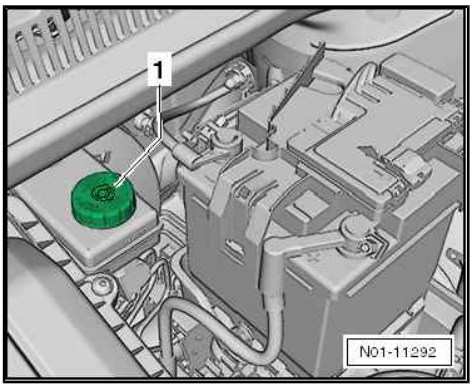

Sequence bleeder valves:	Brake fluid quantity which must flow out of bleeder valves:
Brake caliper	
Front left	0.20 l

Sequence bleeder valves:	Brake fluid quantity which must flow out of bleeder valves:
Front right	0.20 l
Wheel brake cylinder	
Rear left	0.30 l
Rear right	0.30 l
Clutch slave cylinder	0.15 l
Total quantity for manual gearbox including the quantity extracted from the brake fluid reservoir	approx. 1.15 l

4.7 Brake system and shock absorbers: inspecting for leaks and damage

Check following components for leaks and damage:

- ♦ Brake master cylinder
- ♦ Brake servo (for anti-lock brake system: hydraulic unit)
- ♦ Brake pressure regulator and
- ♦ Brake caliper
- ♦ Shock absorbers (during inspection only)
- ♦ Presence of dust caps on brake fluid bleeder screws
- ♦ Presence of caps on guide bushes
- – Ensure that brake hoses are not twisted.
- – Additionally ensure that brake hoses do not touch any vehicle components when steering is at full lock.
- – Check brake hoses for abrasion, porosity and brittleness.
- – Check brake lines for corrosion.
- – Check brake connections and fastenings for correct seating, leaks and corrosion.
- – Check brake lines and brake hoses for correct seating and attachment in retainers.

> ⚠ **WARNING**
>
> ***Faults found must always be rectified (repair measure).***

4.8 Brake pads of front brake discs and rear drum brake linings: checking thickness and condition

This chapter provides information on the following subjects:

Special tools and workshop equipment required

♦ Torque wrench - V.A.G 1332-

♦ Electric hand torch and mirror

Perform the following procedure:

The adapter to loosen and tighten the anti-theft wheel bolts can be found in the vehicle tool kit ⇒ page 81 .

4.8.1 Front brake pads: checking

– For better evaluation of remaining pad thickness, use an examination mirror and, if necessary, remove the wheel on the side where the brake pad wear indicator is installed.

– Pull off wheel bolt covers ⇒ page 81 .

– Mark position of wheel relative to brake disc.

– Unbolt wheel bolts and remove wheel.

– Measure inner and outer pad thickness.

a - Pad thickness “without” backplate

Wear dimension: 2 mm

The brake pads have reached their wear limit at a pad thickness of 2 mm (without backplate) and must be renewed (repair measure). Inform customer!

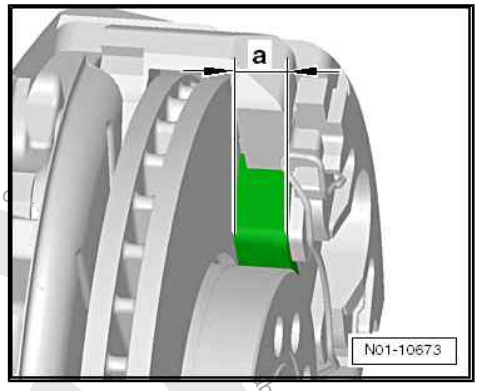

Note

When replacing brake pads, always check brake discs as well for wear! Checking and if necessary replacing the brake discs is a repair measure.

– Check brake disc for wear:

Procedure

⇒ Brake system; Rep. gr. 46 ; Front brake; Assembly overview - front brake .

– Install wheel in marked position.

– Tighten wheel bolts diagonally and alternately, specified torque ⇒ page 81 .

– Place adapter in vehicle tool kit after completing work.

– Fit wheel bolt covers if necessary .

4.8.2 Rear drum brake pads: checking

– Remove plug -1-.

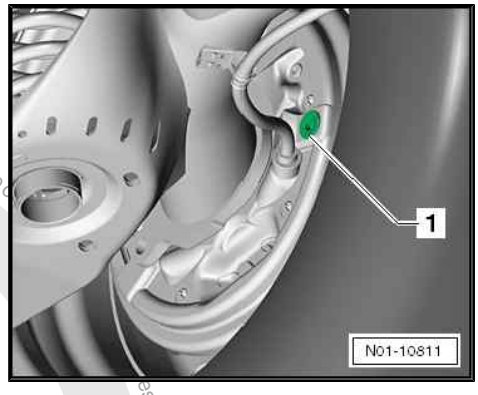

– Using an electric torch, check thickness -a- of drum brake pad without backplate by carrying out a visual check through inspection hole -2-.

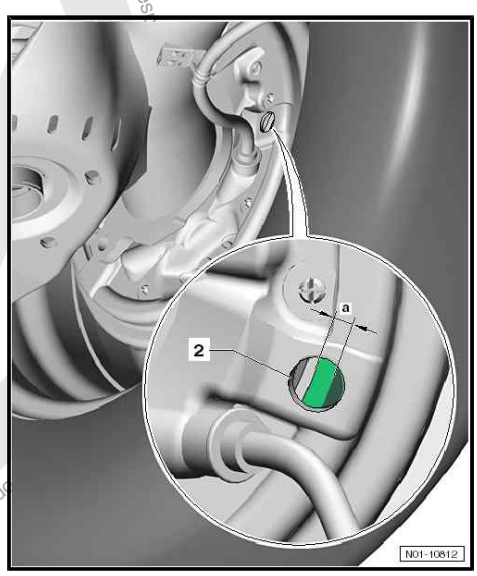

♦ Wear limit -a- 2.5 mm

– Make sure that brake pads are not smeared with brake fluid or grease.

Note

At a pad thickness of 2.5 mm the brake pads have reached their wear limit and must be renewed (repair measure). Inform customer!

Procedure

⇒ Brake system; Rep. gr. 46 ; Rear brake; Assembly overview - rear brake

– Reinstall plug -1- after checking.

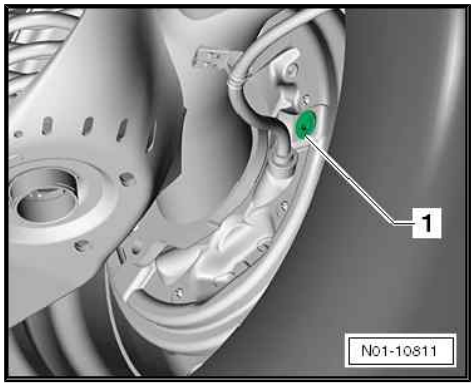

4.8.3 Brake discs: checking condition

Check all brake discs for the following damage patterns:

♦ Cracks

♦ Scoring

♦ Rust (no surface rust)

♦ Burrs on circumference of brake disc

Note

Inform customer if brake disc damage is similar to these damage patterns. Renewing the brake discs is a repair measure.

4.9 Brake fluid level: checking

Observe the following:

Note

On right-hand drive vehicles, the brake fluid reservoir is located on the right side in engine compartment.

- The brake fluid is dependent on pad wear.
- Brake fluid VW 501 14 with part number -B 000 750- must be used.

WARNING

- ***Never allow brake fluid to come into contact with fluids that contain mineral oils (e.g. oil, petrol, cleaning agents). Mineral oils will damage seals and rubber grommets of brake system.***
- ***Brake fluid is poisonous. In addition, due to its corrosive nature, it must not come into contact with paint.***
- ***Brake fluid is hygroscopic, which means it absorbs moisture from the ambient air and should therefore always be stored in air-tight containers.***
- ***Rinse off spilled brake fluid using plenty of water.***
- ***Observe relevant disposal regulations.***

Brake fluid level at delivery inspection:

– At delivery inspection the fluid level must be at MAX. marking.

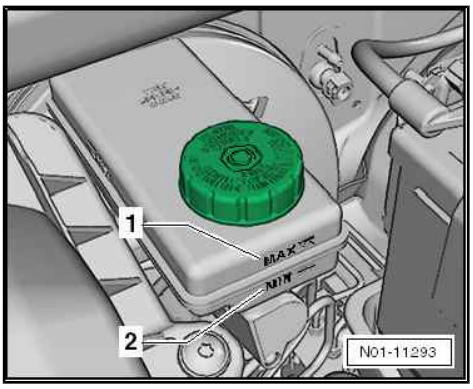

Note

In order that brake fluid does not overflow the reservoir, MAX marking -1- must not be exceeded.

Brake fluid level at inspection service

The fluid level must always be judged in conjunction with lining/pad wear.

When vehicle is in use, fluid level tends to drop slightly due to lining/pad wear and automatic adjustment.

- Recommended brake fluid level, if brake pads are almost at wear limit:

"At MIN marking or just above" -2-, "REPLENISHING IS NOT REQUIRED".

- Recommended brake fluid level when brake pads are new or well within pad wear limit:

"Between MIN and MAX marking".

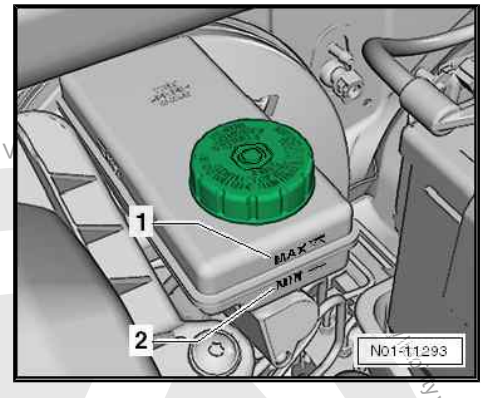

WARNING

If fluid level is below MIN marking -2-, leak-tightness of brake system must be checked before fluid is topped up, "Repair measure".

4.10 Three-phase current drive: calibrating

Note

- *After the event memory has been cleared, recalibration of the three-phase current drive is necessary if there was a fault in the power and control electronics for electric drive - JX1- .*
- *Recalibrating the three-phase current drive requires a test drive during which a speed of 40 km/h must be driven for longer than 5 seconds* ⇒ page 81 .

⇒ Electric drive; Rep. gr. 93 ; Three-phase current drive; Calibrating three-phase current drive VX54

4.11 Natural gas tank: renew.

WARNING

Service and maintenance on the high pressure part of natural gas system must only be performed by specially trained personnel.

Natural gas is highly flammable and, in combination with air, creates a combustible mixture.

There must be no open flame or source of ignition near the natural gas system.

Inhaling natural gas can lead to light-headedness and lung damage. High concentrations may lead to suffocation due to lack of oxygen.

Natural gas is NOT odourless because a gas having a strong odour is added.

Description of work:

⇒ Fuel supply system - natural gas engines; Rep. gr. 20 ; Fuel supply system; Removing and installing natural gas tank

4.12 Natural gas filler connection and sealing cap: check condition, clean if necessary and check seal.

– Open tank flap and remove protective cap from natural gas filler neck.

– Check if seal is fitted and its condition -arrow-.
– Check natural gas filler neck for dirt, damage, and surface corrosion. Clean natural gas filler neck ONLY from outside.
– If the filler neck is dirty, clean off dirt using compressed air. The filler neck will not be damaged as a result.
– If corrosion is found on the surface of the natural gas filler neck, remove it using a lint-free cloth.

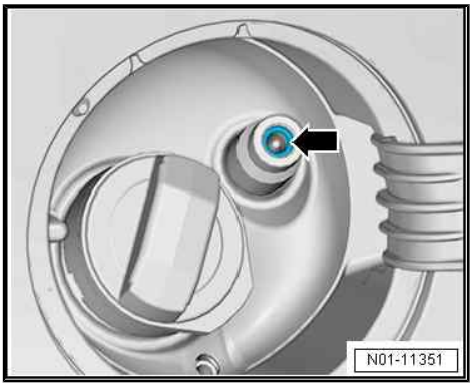

4.13 Fault memory of all systems: reading with vehicle diagnostic tester , correcting possible faults according to repair guidelines

– Read event memory ⇒ Vehicle diagnostic tester.
– Repair all faults according to repair guidelines.

> ⚠ **Caution**
>
> *The vehicle must always be delivered to the customer with event memory cleared.*

Static faults

If one or more static faults are found in the event memory, we recommend seeking agreement from the customer to rectify these faults using Guided Fault Finding.

Sporadic faults

If only sporadic faults or notes are stored in the event memory and the customer has no complaints regarding the electronic vehicle system, erase event memory.

4.14 Natural gas system: reset interval display if a check in line with ECE ruling 110 has been carried out

Natural gas vehicles as of model year 2019 have an interval display in the dash panel insert that reminds the vehicle operator every 48 months of the necessary inspection of the natural gas system.

These 48 months are determined in ECE ruling 110 and valid for Europe.

The interval display must only be reset after a check in line with ECE ruling 110 has been carried out.

Only exception: reset in the context of a handover inspection of new vehicles. Here, the check in line with ECE ruling 110 needn't to be carried out before.

If the additional work "Natural gas system: inspecting natural gas fuel tank for corrosion and leakage" is carried out during service according to manufacturer specifications, this work can be considered as part of the statutory check-up in line with ECE ruling 110.

Special tools and workshop equipment required

- Vehicle diagnostic tester

– Natural gas system: reset interval display ⇒ Vehicle diagnostic tester.

4.15 Natural gas system: inspect natural gas tank for corrosion and leakage.

Special tools and workshop equipment required

- Gas leak detecting system - VAS 523 003-
- Mirror
- Battery lamp - VAS 6901-

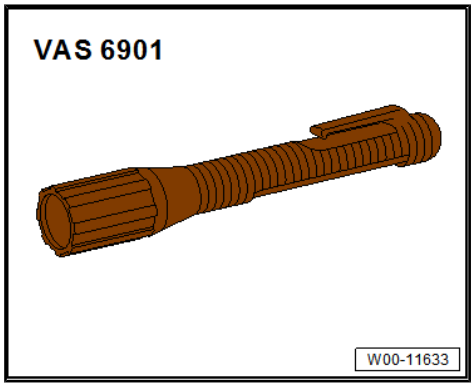

- Leak detecting spray

WARNING

For reasons of safety, service and maintenance of the natural gas system may only be meticulously carried out by specially trained personnel.

Natural gas is highly flammable and, in combination with air, creates a combustible mixture.

There must be no open flame or source of ignition near the natural gas system.

Inhaling natural gas can lead to light-headedness and lung damage. High concentrations may lead to suffocation due to lack of oxygen.

Natural gas is NOT odourless because a gas having a strong odour is added.

Condition for testing:

- All parts of the natural gas system to be checked must be reached easily.
- The exhaust gas warning lamp in the dash panel insert must not light up and there must be no entries concerning natural gas in the event memory of the engine control unit.
- Working environment free of draught

Note

- *Every draught of air above 1.8 km/h (slight gust of wind) will result in falsification of the measuring result. Therefore, it is essential to work in a draught-free environment.*
- *When working on the natural gas system always ensure for tidiness and cleanliness!*

Inspection

– Remove underbody cladding ⇒ General body repairs, exterior; Rep. gr. 66 ; Underbody cladding
– Check underbody trim from inside for soiling and clean with normal workshop cleaning agents if needed.
– Check natural gas system for corrosion and security.
– With the aid of a mirror, inspect complete natural gas tank.
– For German market only: make sure gap between natural gas fuel tank and fuel tank shut-off valve is sufficiently waxed ⇒ page 58 .

Applicable procedure for assessment of steel and CFRP fuel tanks: ⇒ Gas engines - general information; Rep. gr. 20 ; Fuel tanks; Damage assessment catalogue for natural gas fuel tanks

Testing for leaks

– Switch on ignition and start engine to set the pressure ratios in the gas system to the operating mode. For the leakage test, the engine can be switched off.

Caution

- ***Pressurised natural gas may escape from natural gas tanks.***
- ***Natural gas is highly flammable and, in combination with air, creates a combustible mixture.***
- ***Close fuel tank shut-off valves manually. ⇒ Fuel supply system – natural gas engines; Rep. gr. 20 ; Fuel tanks; Closing fuel tank shut-off valves N361/N362 by mechanical means .***

– At indicated test locations -arrows- only, check for leaks using gas leak detector - VAS 523 003- . It is absolutely necessary to check all threaded connections of the gas system.

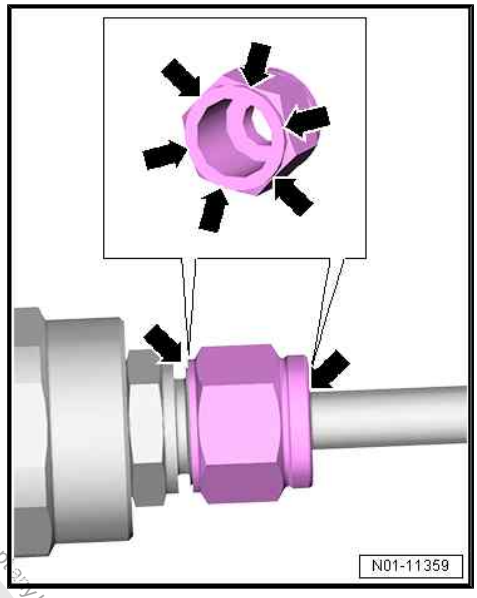

Note

- *The gas leak detector can only determine whether there is gas in the ambient air.*
- *Any other result than a green LED for »OK« is not permitted on the gas leak detector. As soon as a yellow or red LED lights up, a leak detector spray must be used to prove conclusively whether the gas is actually escaping from the vehicle system. When a leak detector spray is used, no bubbles may escape from the sprayed area within a test period of 3 minutes. Should leaks occur, these must be repaired, after which the gas system must be retested.*

Test locations

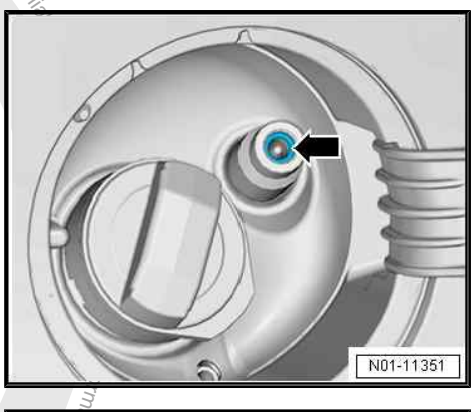

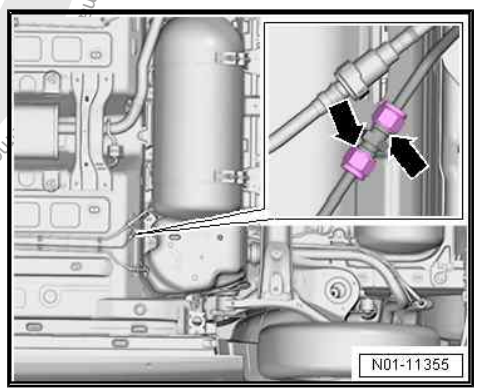

- Natural gas filler neck -arrow-.
- Coupling of high-pressure line -arrow- on underbody.
- Tank shut-off valves for natural gas tanks 1 and 2 with all connections, threaded connections and mechanical shut-off valves -arrows-

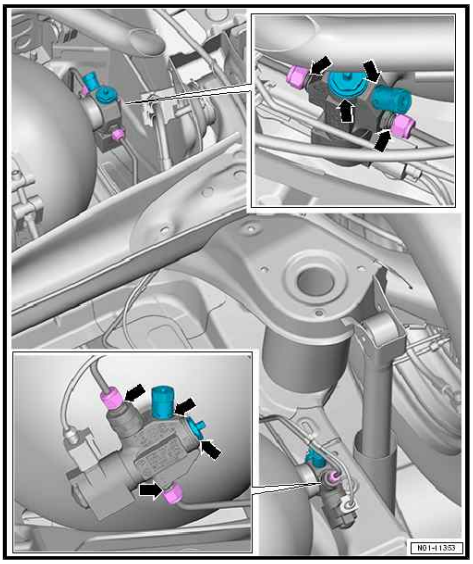

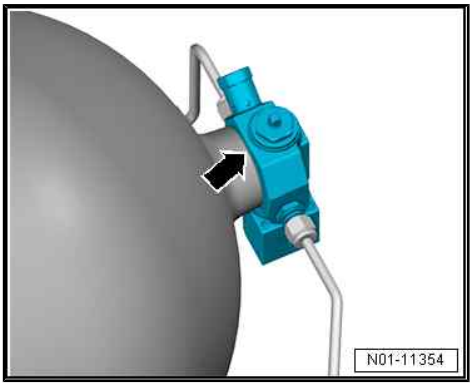

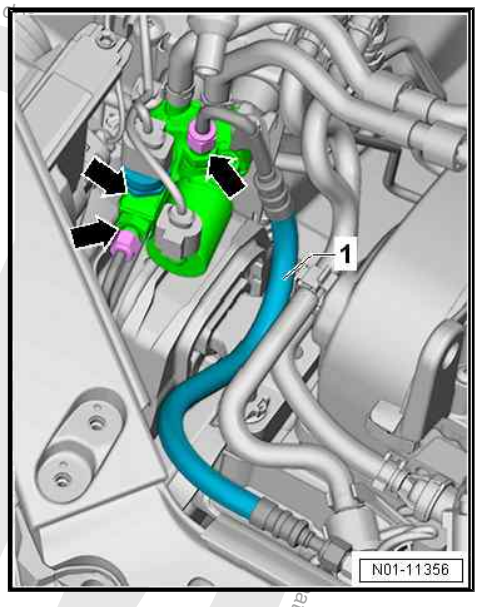

- ♦ Check electromechanical high-pressure regulator for gas mode with all connections and threaded connections -arrows-. Check condition of low pressure hose -1-.
- ♦ Gas rail with gas injectors -1-, gas rail sensor -2- and connection for low-pressure line -3-.

– Installing underbody cover ⇒ General body repairs, exterior; Rep. gr. 66 ; Underbody cladding .

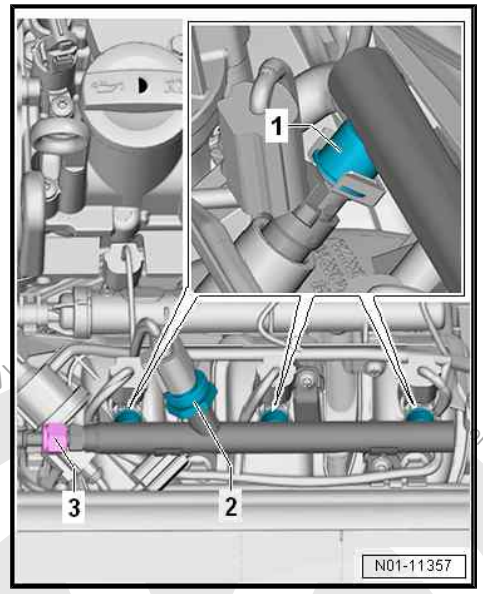

4.16 Natural gas system: checking wax layer between natural gas fuel tank and fuel tank shut-off valve

Note

Applies only to German market.

Special tools and workshop equipment required

- ♦ Wax ⇒ ETKA

– Make sure gap between natural gas fuel tank and -1- and fuel tank shut-off valve -2- is sufficiently waxed.

– If necessary, spray wax over entire circumference -arrows-.

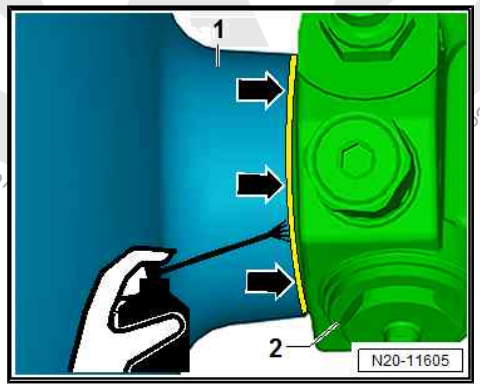

4.17 Boots: inspecting

– Check outer and inner boots -arrows- for leaks and damage.

– Ensure clamps -1- are fitted on boots.

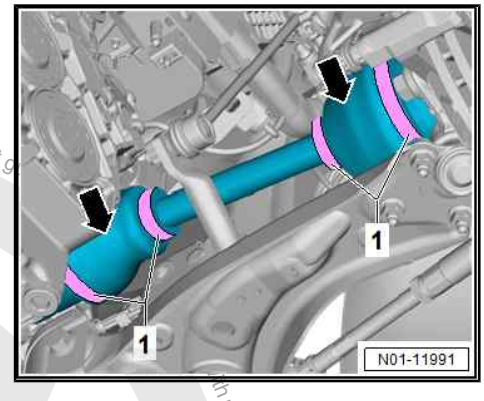

4.18 High-voltage battery: check charge level

Checking charge level of high-voltage battery

The charge level of the high-voltage battery is displayed on the right of the dash panel insert.

The charge level must be determined for the first time on vehicle delivery:

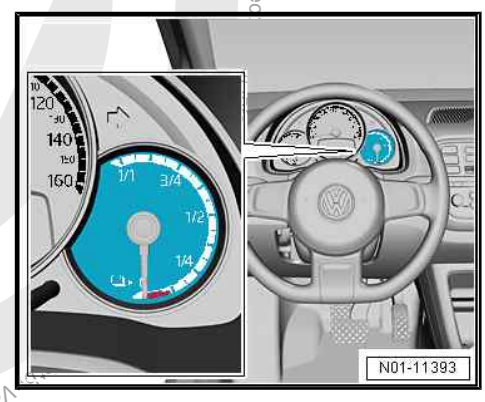

Note

- *The high-voltage battery must be fully charged during the delivery inspection.*
- *During subsequent service inspections, the high-voltage battery will be charged fully only if requested by the customer.*

4.19 Maintenance of high-voltage battery

The high-voltage battery maintenance programme includes determining the battery charge level ⇒ page 59 and, depending on the test result, the subsequent charging of the battery.

If the charge level display indicates 1/4 or <1/4, the high-voltage battery has to be charged until the charge level display indicates 1/2 at least.

4.20 High-voltage battery: charging

Note

- *The high-voltage battery must be fully charged during the delivery inspection.*
- *During subsequent service inspections, the high-voltage battery will be charged fully only if requested by the customer.*

4.21 Interior and exterior body: inspecting for corrosion with doors and flaps open

Test locations

- Sliding roof frame
- Inner and outer door frame
- Area around trim strips
- Windscreen roof edge
- Outer and inner A-pillar
- Bonnet
- Wheel arches
- Inner and outer tailgate

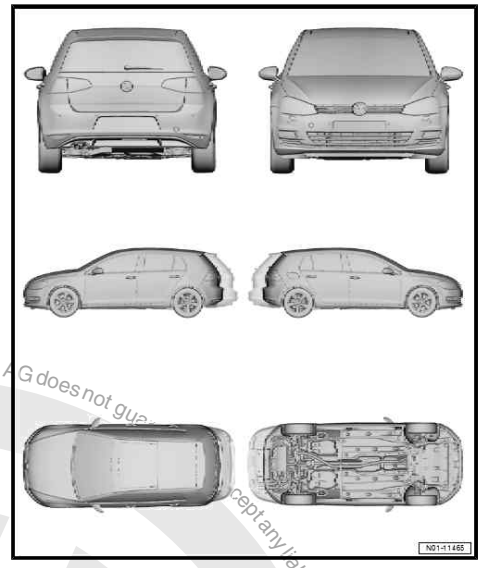

4.22 Poly V-belt: renewing

Procedure

⇒ Rep. gr. 13 ; Cylinder block belt pulley end; Removing and installing poly V-belt

4.23 Poly V-belt: check condition

Carry out following procedure:

– Use a socket spanner to turn engine at vibration damper on pulley.

Check the poly V-belt -1- for:

- Sub-surface cracks (cracks, core ruptures, cross sectional breaks)
- Layer separation (top layer, cord strands)
- Base break-up
- Frayed cord strands
- Flank wear (material wear, frayed flanks, flank brittleness - glassy flanks-, surface cracks)

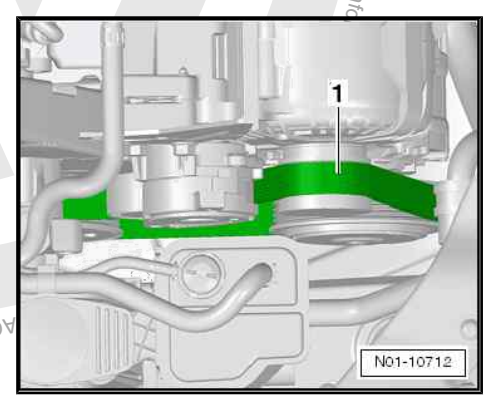

Caution

- *If faults are found, it is absolutely necessary to renew the poly V-belt.*
- *In the case of petrol engines, toothed belts which came into contact with oil, brake fluid, fuel or coolant, must always be renewed.*
- *This can avoid breakdowns and malfunctions.*
- *The replacement of a poly V-belt is a repair measure.*

4.24 Cooling system: checking frost protection and coolant level

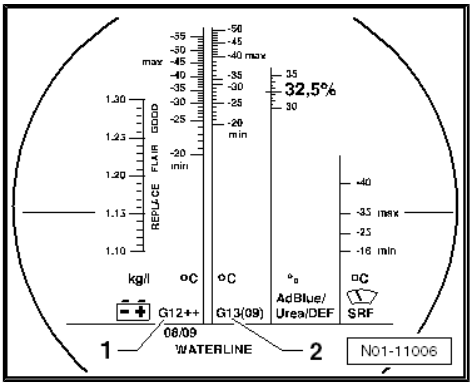

Note

- *The water used for mixing has a major influence on the effectiveness of the coolant. Because the water quality differs from country to country and even from region to region, the quality of the water to be used in the cooling system has been specified by Volkswagen. Distilled water fulfils all requirements. Therefore, only ever use distilled water when mixing coolant for topping up or renewing coolant.*
- *Use only coolant additives which conform with the ⇒ Electronic parts catalogue (ETKA) . Other coolant additives may reduce corrosion protection substantially. The resulting damage could lead to loss of coolant and subsequent severe damage to the motor.*
- *Mixed in the proper proportions, coolant inhibits frost and corrosion damage as well as scaling. Furthermore, the boiling point is raised. For these reasons, the cooling system must be filled all year round with a coolant additive.*
- *Because of its high boiling point, the coolant improves engine reliability under heavy loads, particularly in countries with tropical climates.*
- *Use ONLY refractometer - T10007A- for determining current anti-freeze value.*
- *Frost protection must be guaranteed down to -25°C as a minimum and, in countries with arctic conditions, down to approx. -36°C. Increasing the frost protection is permissible only if climatic conditions require stronger frost protection. It may, however, be increased only to a maximum of -48°C. Otherwise, the cooling effect will be impaired.*
- *Do not reduce the coolant concentration by adding water even in the warm season or in hot countries. Frost protection must be guaranteed down to at least -25°C.*
- *Read anti-freeze figures from the respective scale for type of anti-freeze added.*
- *The temperature read off the refractometer - T10007A- corresponds the »ice flocculation point«. Flakes of ice may start forming in the coolant at this temperature.*
- *Never reuse old coolant.*
- *Use only a water/coolant additive mixture as a slip agent for coolant hoses.*

4.24.1 Frost protection: checking, replenishing coolant additive if necessary

Special tools and workshop equipment required

- Refractometer - T10007 A-

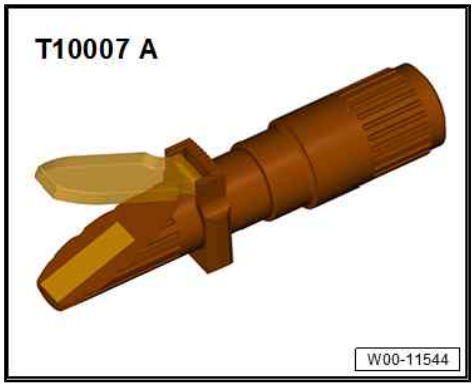

Note

Read precise value for the following tests at light/dark boundary. Using a pipette, place a drop of water on the glass to improve the readability of the light/dark boundary. The light-dark border can be clearly recognised on the "WATERLINE".

– Check concentration of coolant additive using refractometer - T10007 A- (refer to operating instructions).

The scale -1- of the refractometer is calibrated for coolant additives G12; G12 Plus, G12 Plus Plus and G11.

The scale -2- is only calibrated for coolant additive G13.

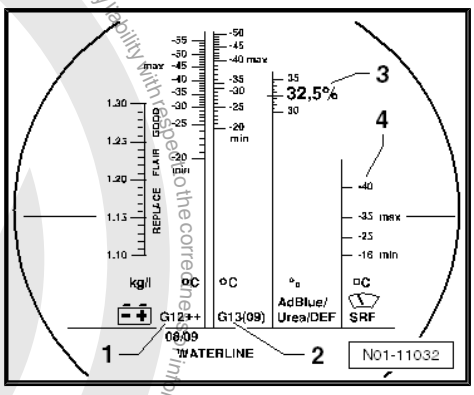

Note

- *If the currently used coolant additive cannot be determined precisely, use the scale -2- for coolant additive G13.*
- *Please observe disposal instructions!*

– Check coolant additive concentration after road test again.

4.24.2 Coolant level: checking, replenishing coolant if necessary

Version 1

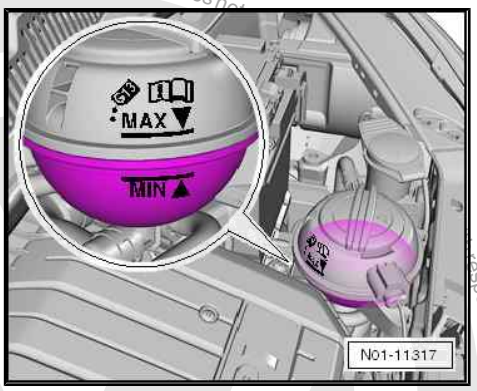

– Check coolant level in expansion tank when engine is cold.

♦ Delivery inspection: Coolant level above “MIN. marking”.

♦ At delivery inspection, coolant level above “MAX marking” is permissible as well.

♦ The excessive amount of coolant does not need to be extracted as the coolant level in new vehicles will decrease after the system has been bled.

♦ Inspection service or inspection: coolant level above “MIN marking”.

– If coolant is too low, add required amount according to mixture ratio.

Note

If fluid loss is greater than can be expected through normal use, determine source and rectify (repair measure).

Version 2

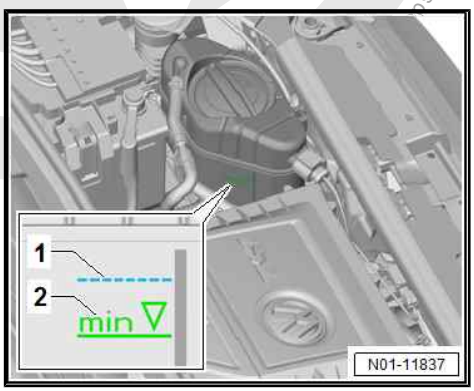

– Check coolant level in coolant expansion tank with engine cold.

♦ Delivery inspection: coolant level is at least at marking -1-.

♦ At delivery inspection a coolant level above marking -1- is permissible.

♦ The excessive amount of coolant does not need to be extracted as the coolant level in new vehicles will decrease after the system has been bled.

♦ Inspection: coolant level is above “min. marking” -2-.

– If coolant is too low, add required amount according to mixture ratio.

Note

If fluid loss is greater than can be expected through normal use, determine source and rectify (repair measure).

4.24.3 Mixing ratio:

Caution

Use only distilled water for mixing coolant additives. The use of distilled water ensures optimum protection against corrosion.

Frost protection to	Coolant additive portion	Distilled water
-25 °C	approx. 40%	approx. 60 %
-36 °C	approx. 50 %	approx. 50 %

4.25 Air filter: cleaning housing and renewing filter element

Air filter element: removing and installing, 1.0 l manifold injection engines ⇒ page 64

Air filter element: removing and installing, 1.0 l TSI engines ⇒ page 66

4.25.1 Air filter element: removing and installing, 1.0 l manifold injection engines

Special tools and workshop equipment required

- Torque screwdriver - VAS 6494-

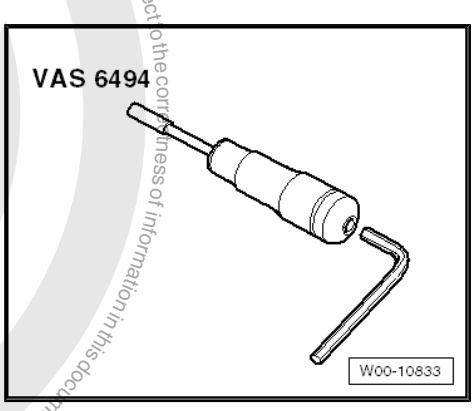

Procedure

– Press locking lugs -arrows- and pull intake connection off -1- in -direction of arrow-.

– Pull hose -1- off air filter housing.

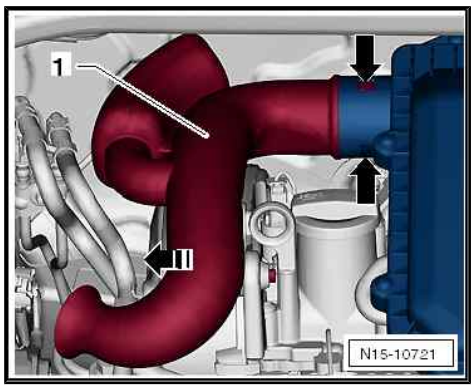

– Pull air filter housing at points -2- and -3- upwards off pins and remove housing.

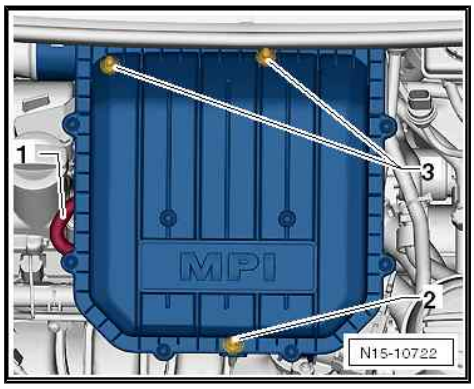

– Unscrew and remove bolts -arrows-.

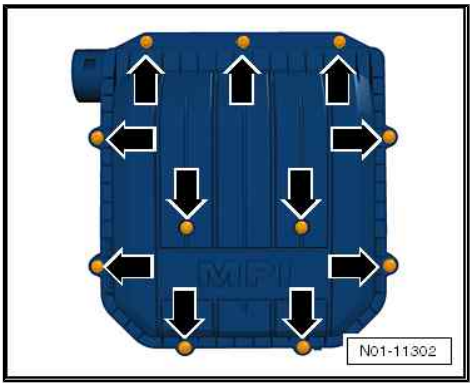

– Remove upper part of air filter and take out air filter element -1-.

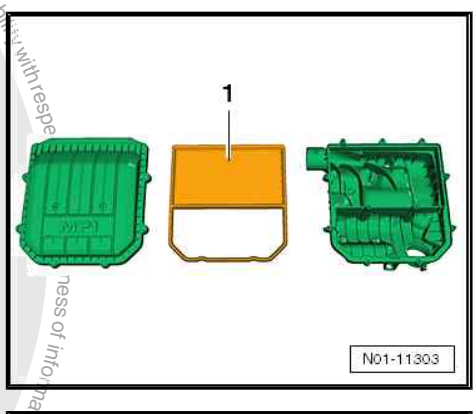

Note

Please observe disposal instructions!

– Clean filter housing and install new filter element.
– Fit upper part of air filter, and tighten bolts -arrows- to specified torque.

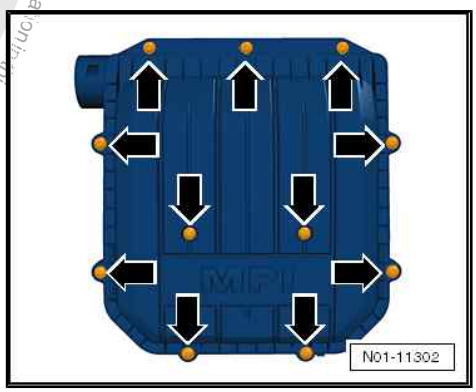

Specified torque	Nm
Securing bolts	1.6

Renewing fastening elements:

– Remove fastening elements -arrows- upwards.
– Then push new fastening elements into the guides.

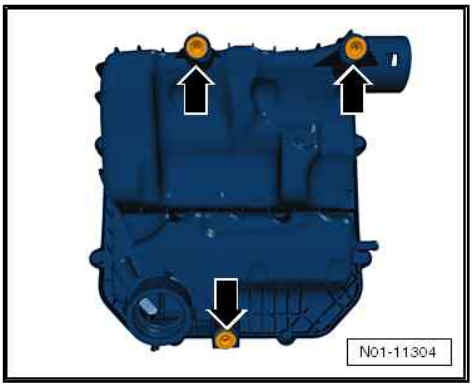

Note

Dot not grease or lubricate the fastening elements -arrows- before installation.

– Install air filter housing in reverse order of removal.

4.25.2 Air filter element: removing and installing, 1.0 l TSI engines

Removing

– Remove air filter housing. ⇒ 3-cylinder direct injection engine (1.0 l engine, 4V, EA 211, turbocharger); Rep. gr. 24 ; Air filter; Removing and installing air filter housing .

– Unscrew bolts -1- on underside of air filter housing.

– Remove lower part of air filter housing, and remove air filter element.

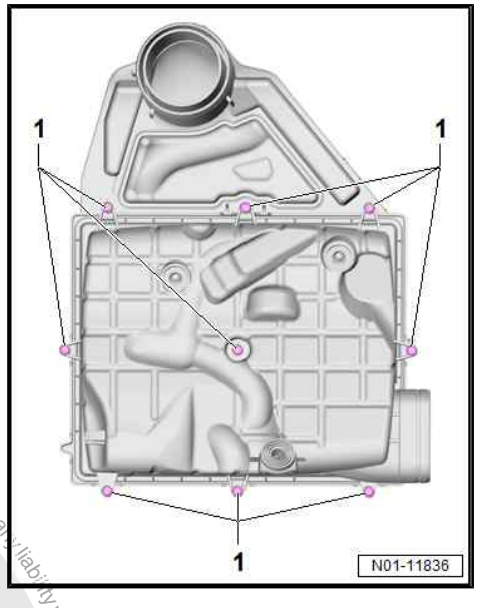

Installing

– Check housing and water drains for soiling, clean if necessary. ⇒ page 67

– Insert air filter element -2- centrally into mounting in air filter upper part -1-.

– Fit lower part of air filter -3- onto upper part of air filter -1-.

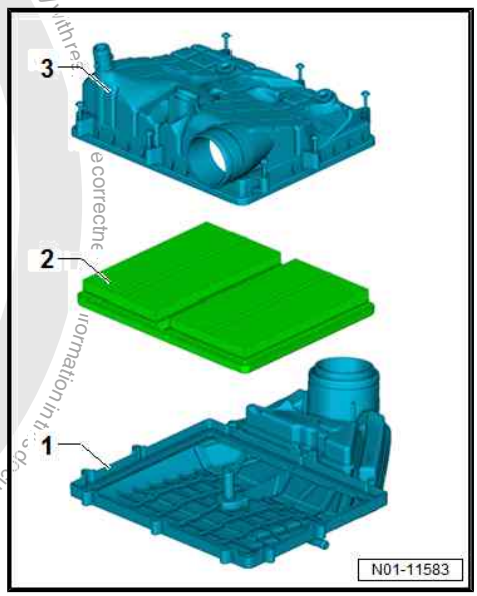

– Bolt upper part of air filter and lower part of air filter together using bolts -1-, and tighten bolts to specified torque.

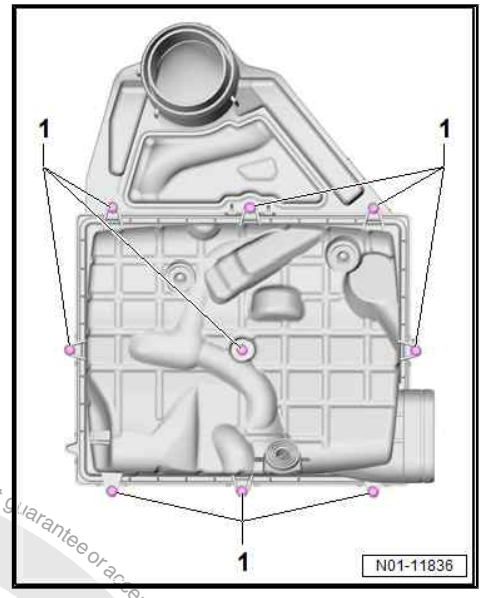

Renewing fastening elements:

– Remove fastening elements -1- upwards.

– Then push new fastening elements into the guides.

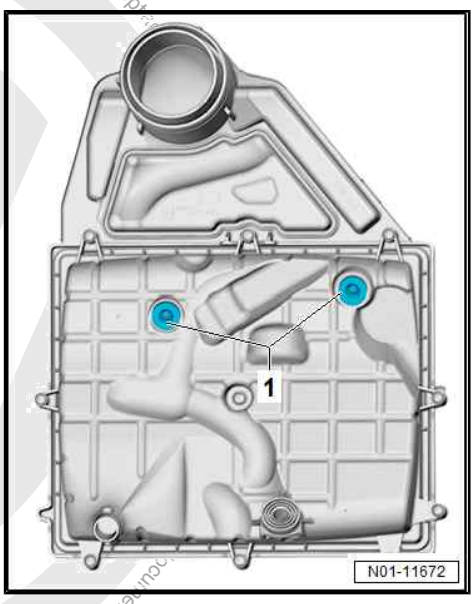

Note

Dot not grease or lubricate the fastening elements -1- before installation.

– The remaining steps for installing the air filter housing are carried out in the reverse order of removal.

Specified torque	Nm
Securing bolts for upper part of air filter and lower part of air filter -1-	1.5
Securing bolt for air filter housing -2-	5

4.25.3 Fuel filter housing: cleaning

Note

- *The air mass value may be falsified due to excessive soiling or moisture. This would lead to loss of power, since a smaller injection quantity is calculated.*
- *Please observe disposal instructions!*
- *The cleaning is carried out according to a separate calculation.*

– Check air mass meter and intake hose for salt residue, dirt and leaves (engine intake side).

– Check water drain hose in lower part of air filter housing for dirt and clogging.

– Remove salt residues, dirt and leaves from upper and lower part of air filter housing using a vacuum cleaner if necessary.

4.26 Multi-purpose additive for petrol fuel: adding

4.26.1 Specification for using multi-purpose additive for petrol fuel

Note

- *In the three markets mentioned below there is a particularly high risk of deposits forming on the injectors and inlet valves owing to the quality of the fuel.*
- *To counteract the formation of deposits, a multi-purpose additive for petrol fuel must be added.*
- *Only additives compliant with VW 507 53 B (multi-purpose additive G 001 780 M3) may be used.*
- *Observe the dosing instructions on the additive container.*
- *After adding the additive, it is extremely important to fully refuel the vehicle to achieve optimal effectiveness of the additive.*

– Fill multi-purpose additive for petrol fuels into regular fuel tank during each oil change service.

Country		
China	India	Russia

4.26.2 Recommendation for using multi-purpose additive for petrol fuel

Note

- *In the following markets with a high risk of coke and deposit formation, the addition of a multi-purpose additive is recommended owing to the elevated olefin content and aromatics in the petrol.*
- *Only additives compliant with VW 507 53 B (multi-purpose additive G 001 780 M3) may be used.*
- *Observe the dosing instructions on the additive container.*
- *After adding the additive, it is extremely important to fully refuel the vehicle to achieve optimal effectiveness of the additive.*
- *The multi-purpose additive can also be used in all other markets that are not listed in the table.*

– Fill multi-purpose additive for petrol fuels into regular fuel tank during each oil change service.

Country
Algeria
Bahrain

Country
Bolivia
Brazil
Ghana
Indonesia
Iraq
Iran
Japan
Yemen
Jordan
Cambodia
Qatar
Columbia
Kuwait
Lebanon
Malaysia
Mauritius
Niger
Nigeria
Oman
Pakistan
Peru
Philippines
Saudi Arabia
Senegal
Singapore
Surinam
Syria
Chad
Uzbekistan
United Arab Emirates
Vietnam

4.27 Engine and components in engine compartment: inspecting for leaks and damage (from above and below)

Inspect as follows:

– Check engine and components in engine compartment for leaks and damage.

– Lines, hoses and connections

♦ Fuel system

♦ Cooling and heating system

♦ Lubrication system

♦ Air conditioning system

♦ Intake system

- And brake system

Check for leaks, abrasion, porousness, cracks, correct seating and attachment in retainers.

Note

- *Arrange for defects to be rectified as repair measures.*
- *If fluid loss is greater than can be expected through normal use, determine source and rectify (repair measure).*

4.28 Engine oil level: checking

Note the following:

– After shutting off engine, wait at least 3 minutes so that the oil can flow back into the sump.

– Pull out dipstick, wipe with a clean cloth and push dipstick in again to limit stop.

– Pull dipstick out again and read oil level.

Note

- *The oil level must always be in the upper third of area -B- for the delivery inspection. This way, you will achieve the greatest possible customer satisfaction.*
- *The oil-change quantity in the service table was determined experimentally and is sufficient for the technical functionality of the engine in all operating conditions. During all other service events, the oil level must be checked and corrected as necessary if the customer requests this. This enables an additional topping-up to the specified oil quantity to the upper limit of the dip stick. Due to tolerances, the oil temperature and the drip time, various quantities may be required for topping up.*

A - Do not top up oil.

B - Oil can be replenished up to the max. mark -A-.

C - Oil must be replenished. The oil level must then be at least in the upper half of the measuring area -B-.

– If oil level is above max. mark -A-, drain or extract excess oil to prevent damage to catalytic converter.

– If the oil level is below min. marking -C- replenish a sufficient amount of oil (at least 0.5 l) ⇒ page 4 .

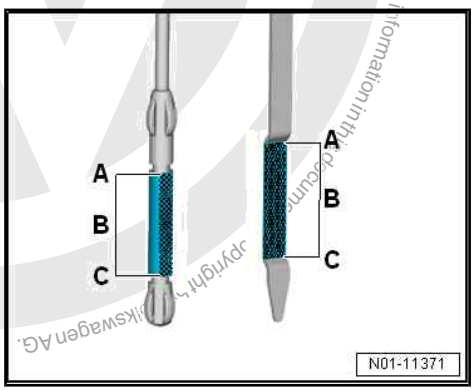

4.29 Engine oil: draining; renewing oil filter and filling engine oil

Draining engine oil ⇒ page 71

Renewing oil filter, 1.0 l engines ⇒ page 72

Engine oil: replenishing ⇒ page 73

Special tools and workshop equipment required

- Used oil collector and extractor - VAS 6622 A-

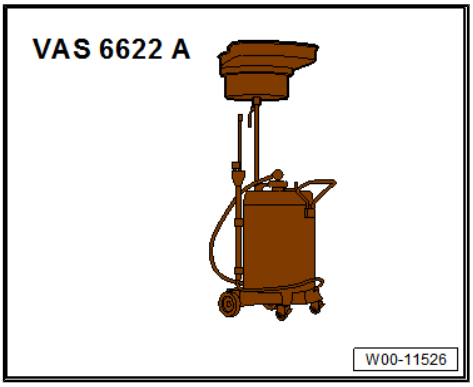

- Torque wrench - V.A.G 1331-

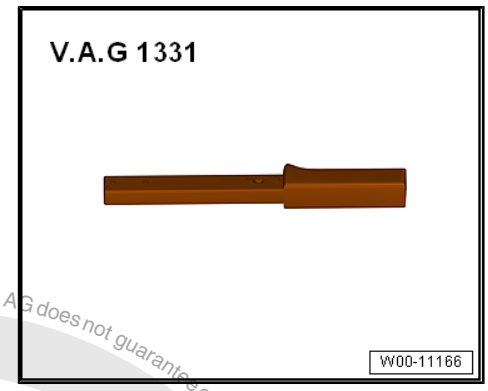

- Oil spill cloth

4.29.1 Engine oil: draining

Draining engine oil on 1st oil change ⇒ page 71

Draining engine oil after 1st oil change ⇒ page 72

Caution

- *Catalytic converter damage due to excessive engine oil in the engine. Too much oil remains after extracting.*
- *Always drain engine oil. Vacuum extraction is not allowed.*

Draining engine oil on 1st oil change

– Unscrew and dispose of oil drain plug with captive seal -1-.

– Let engine oil drain.

Note

Please observe disposal instructions!

– Screw in new oil drain plug -3- with new seal -2- hand-tight first and then tighten it to specified torque.

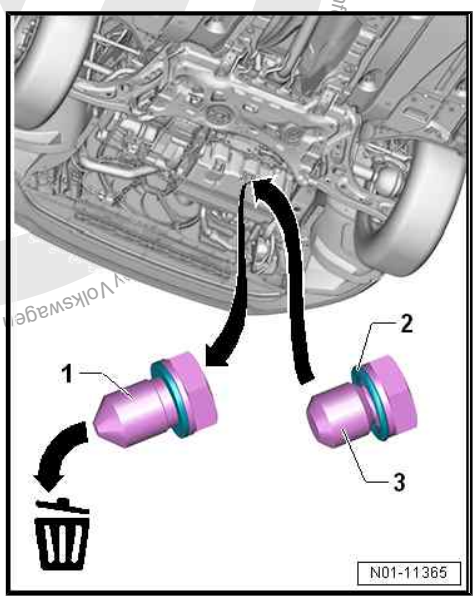

Draining engine oil after 1st oil change

– Unscrew oil drain plug -2- and dispose of seal -3-.

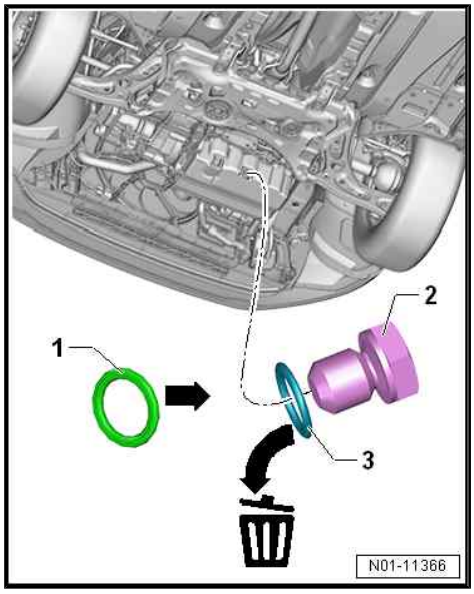

Note

The oil drain plug will be reused after the 1st oil change.

– Let engine oil drain.

Note

Please observe disposal instructions!

– Screw in oil drain plug -2- with new seal -1- hand-tight and then tighten it firmly to specified torque.

Specified torque	Nm
Oil drain plug	30

– Replenish engine oil.

Engine oil capacity:

- ⇒ Maintenance tables
- Engine oil: capacities and specifications ⇒ page 74

WARNING

- *Torque specifications must not be exceeded.*
- *Excessive torque can cause leaks in the area of the oil drain plug or even damage.*

4.29.2 Oil filter, 1.0 l engines: renewing

Special tools and workshop equipment required

- Oil filter tool - 3417-

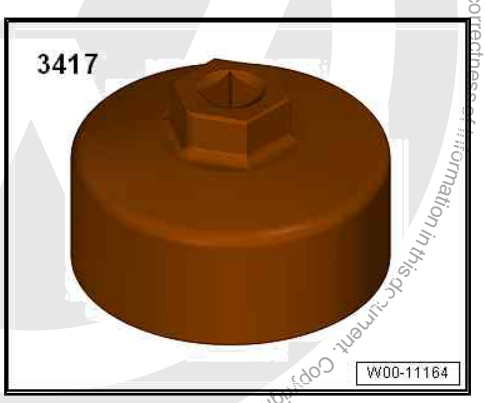

- Torque wrench - V.A.G 1331-

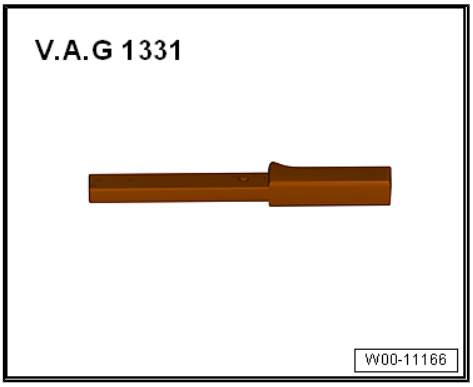

Removing

Note

Prevent engine oil from dripping onto components.

- Loosen oil filter -arrow- using a strap or oil filter tool - 3417- .
- Wait a few minutes, so that engine oil can flow from filter into oil collection and extraction unit .
- Then remove the oil filter.

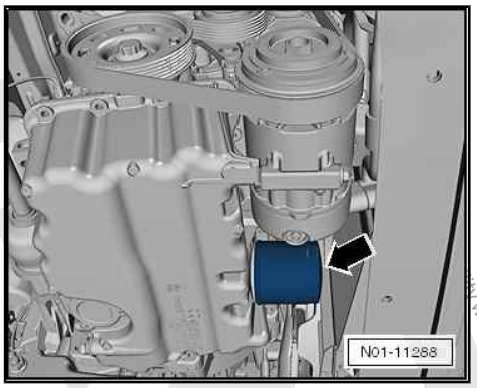

Installing

Note

- *Observe fitting instructions on oil filter!*
- *Please observe disposal instructions!*

- Clean sealing surface of oil filter on oil sump.
- Lightly oil seal on new filter.

- Screw in new oil filter -arrow- by hand.
- Then tighten to specified torque.

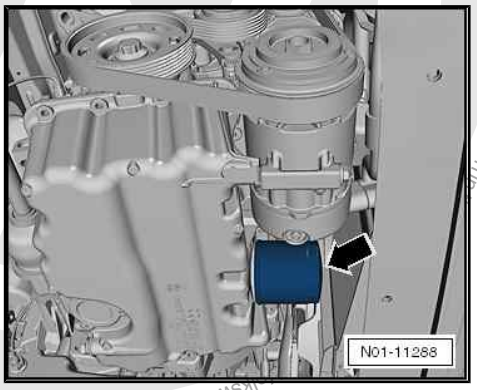

Specified torque	Nm
Oil filter	20

4.29.3 Engine oil: replenishing

Special tools and workshop equipment required

- Oil filler funnel - VAS 6842A-

– When adding oil, use oil filler funnel - VAS 6842A- as appropriate.

– Clean sealing surface in engine oil filler neck using a lint-free cloth prior to screwing in the cap.

Engine oil: capacities and specifications ⇒ page 74

Oil level: checking ⇒ page 70

4.30 Engine oil: capacities and specifications

A new VW standard for engine oil - 508 00/509 00 - has been introduced with immediate effect. This is distinguished by reduced fuel consumption and CO_2 emissions.

The main facts are the following:

- VW 508 00/509 00 is a combined product that meets the petrol specification as VW 508 00 and the diesel specification as VW 509 00.
- Volkswagen recommends not using the new specifications for older engine generations. The recommended specifications are allocated to the engines in this chapter.
- Engines with particulate filter (petrol and diesel) can also be filled with oil standard VW 504 00/507 00 when serviced. However, the caveat could be elevated fuel consumption and CO_2 emissions.
- Engines without particulate filter can also be filled with oil standard VW 502 00/505 01 when serviced. However, the caveat could be elevated fuel consumption and CO_2 emissions.
- The new oil is miscible.
- If oil with VW engine oil standard 508 00/509 00 is used in engines that are not recommended for this, engine damage could ensue.
- As of model year 2018, engines that are not recommended to be used with the new oil will have a notice (lock carrier/engine compartment) from which the oil standard to be used can be gleaned.
- For an overview of the engine oils recommended by Volkswagen, refer to ⇒ Volkswagen InfoNet, Service, Inspection and Maintenance, Approved oils

up!				
Petrol engines		Oil quantity with filter (l)	VW engine oil standards	
Engine code	Capacity / output		With flexible service	With fixed service
CHYA	1.0 l / 44 kW	3.4	---	502 00
CHYB	1.0 l / 55 kW	3.4	---	502 00
CHZA	1.0 l / 66 kW	4.0	---	502 00
CPGA	1.0 l / 50 kW	3.4	---	502 00
DAFA	1.0 l / 44 kW	3.4	---	502 00
DKLC [1)]	1.0 l / 66 kW	4.0	---	508 00, 504 00
DKRA [1)]	1.0 l / 85 kW	4.0	---	508 00, 504 00

[1)] With petrol particulate filter

4.31 Panoramic sliding sunroof

Note

- *Only special lubricant may be used from the following vehicle identification number.*
- *WVWZZZAAZGD019659 (121)*
- *WVWZZZAAZGD900325 (BL1)*
- *The lubricating paste used until now and the new special lubricant are not miscible.*
- *Lubricating paste G 060 751 is coloured grey and easy to detect. The new special lubricant G 060 567 is colourless and barely noticeable.*
- *Employing the new special lubricant results in a new procedure in the course of servicing.*
- *A differentiation is made between countries with high dust ⇒ page 23 and low dust levels.*
- *In countries with low dust levels, only function and noise are checked. In countries with high dust levels, the panorama sliding roof must continue to be cleaned and lubricated.*
- *An inspection must be carried out to determine which grease is in the area of the guide rails.*
- *Panorama sliding roofs in which lubricating paste G 060 751 was used must continue to be cleaned and greased.*

Special tools and workshop equipment required

- Lubricating paste G 060 751
- or
- Special lubricant G 060 567 A2 (spray can with long capillary tube)
- Industrial vacuum cleaner
- Lint-free cloth
- Commercially-available brush: approx. 15 mm wide, angled to approx. 40° in a workshop

Caution

Risk of damage to roof insert by unlocking guide plate blocking element.

- *The guide plate must not be cleaned or lubricated.*

If the blocking element of the control plate -diagram- becomes disengaged during cleaning or lubricating operations, do not operate the panorama sliding/tilting glass roof.

Guide plate: locking ⇒ page 80

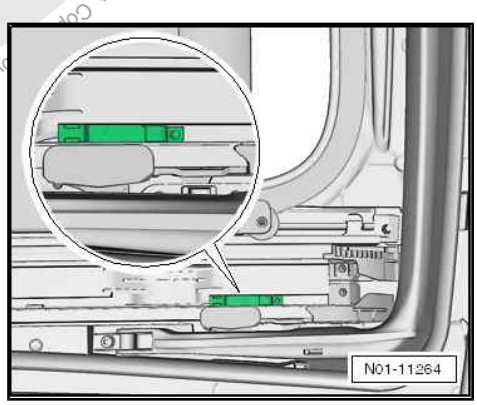

4.31.1 Noise and function: checking

– Check roof system for damage.

– Check function of roof system, i.e. open and close glass panel and sliding headliner/roller blind completely.

Other than the noises associated with normal operation there should be no unusual noises, such as chattering, squeaking, clicking, nor should there be any vibration.

4.31.2 Guide rails: cleaning and lubricating

– Open sunroof roller blind completely.
– Open glass panel completely.
– Remove loose particles of dirt in the guide rail in advance using an industrial vacuum cleaner.
– Remove residual grease and dirt from guide rail using isopropanol and a lint-free cloth.
– Apply lubricant to the outer guide rail -arrow-.

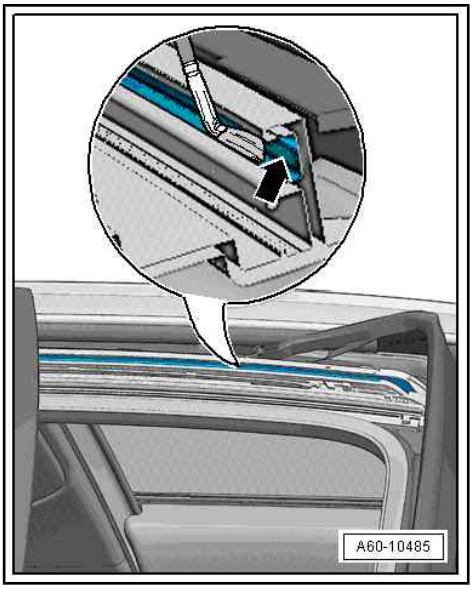

– Apply lubricant to the inner guide rail -arrow-.
– Remove any excess lubricating paste from guide rails using a lint-free cloth.
– Repeat process on the other side of the vehicle.

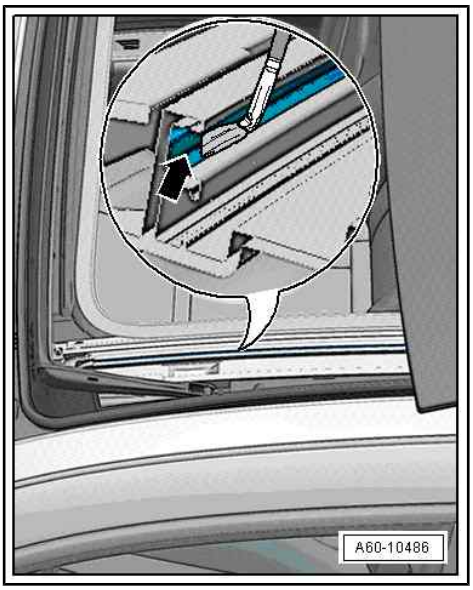

4.31.3 Guide rail: cleaning and lubricating from inside

– Close glass panel just enough so that wind deflector is still completely deployed.
– Remove residual grease and dirt from guide rail using a lint-free cloth.
– Apply lubricant to guide rail from inside -arrows-.
– Remove any excess lubricating paste from guide rail using a lint-free cloth.
– Repeat process on the other side of the vehicle.

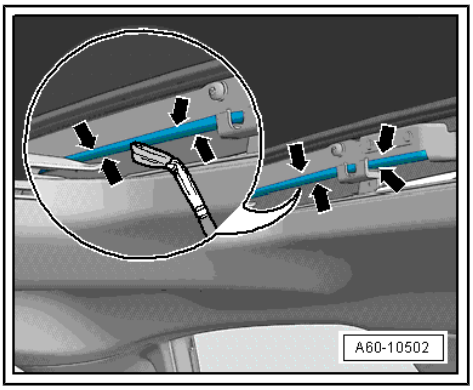

4.31.4 Glass panel guide: cleaning and lubricating from inside

Close glass panel just enough so that wind deflector is still completely deployed.

– Remove residual grease and dirt from glass panel guide using a lint-free cloth.
– Apply lubricant to glass panel guide from inside -arrows-.
– Remove any excess lubricating paste from guide rail using a lint-free cloth.
– Repeat process on the other side of the vehicle.

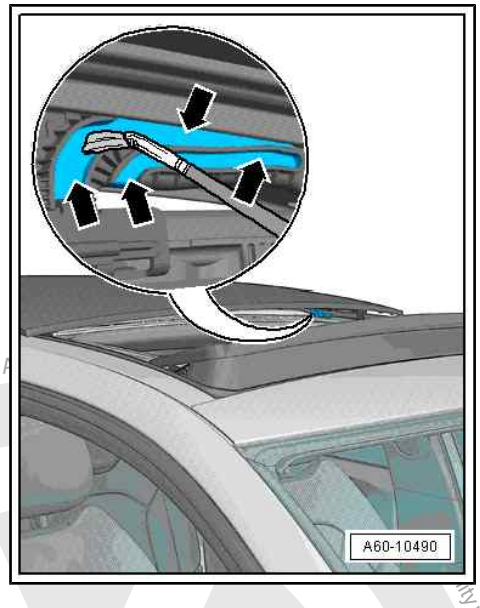

4.31.5 Guide rail: cleaning and lubricating from outside

– Open glass panel completely.
– Remove residual grease and dirt from guide rail using a lint-free cloth.
– Apply lubricant to guide rail from outside -arrows-.
– Remove any excess lubricating paste from guide rail using a lint-free cloth.
– Repeat process on the other side of the vehicle.

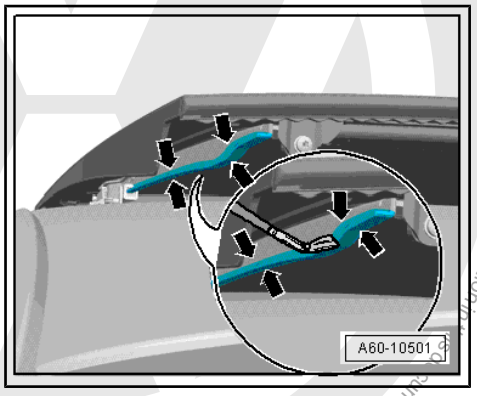

4.31.6 Glass panel mechanism: cleaning and lubricating

- Close glass panel just enough so that wind deflector is still completely deployed.
- Remove residual grease and dirt from glass panel mechanism using a lint-free cloth.
- Apply lubricant to support cage of glass panel mechanism at friction surfaces from outside -arrows-.

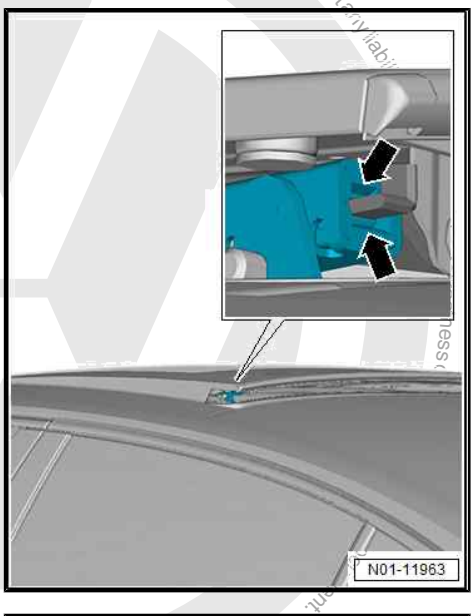

- Open glass panel completely.
- Apply lubricant to support cage of glass panel mechanism at friction surface from inside or outside -arrow-.
- Remove any excess lubricant from support cage and tilt lever of glass panel mechanism using a lint-free cloth.
- Repeat process on the other side of the vehicle.

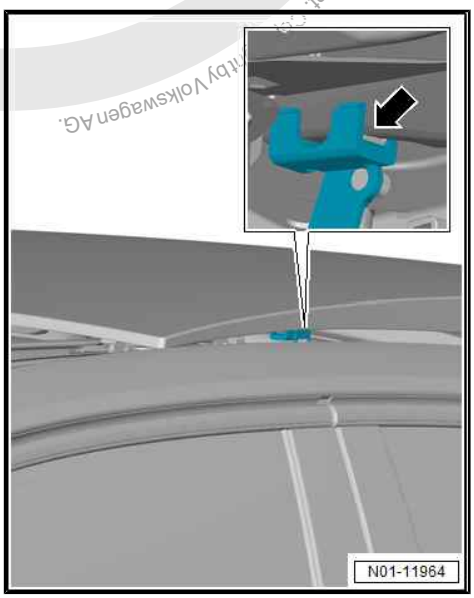

4.31.7 Glass panel guide: cleaning and lubricating from outside

Glass panel completely open.

- Remove residual grease and dirt from glass panel guide using a lint-free cloth.
- Apply lubricant to glass panel guide from outside -arrow-.
- Remove any excess lubricating paste from guide rail using a lint-free cloth.
- Repeat process on the other side of the vehicle.
- Perform complete sequence of roof system operations and check again for lubricant residue at all lubrication points.

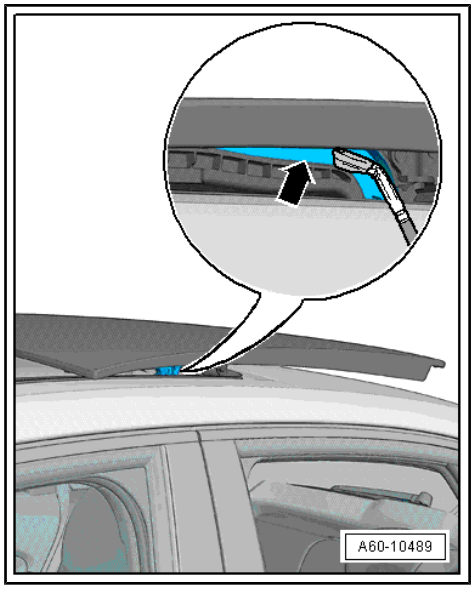

4.31.8 Wind deflector: clean.

Glass panel completely open.

- Clean net and frame of wind deflector -1- with a sponge and soap solution.
- Remove loose particles of dirt from wind deflector slot -arrows- using an industrial vacuum cleaner.
- Close glass panel completely.

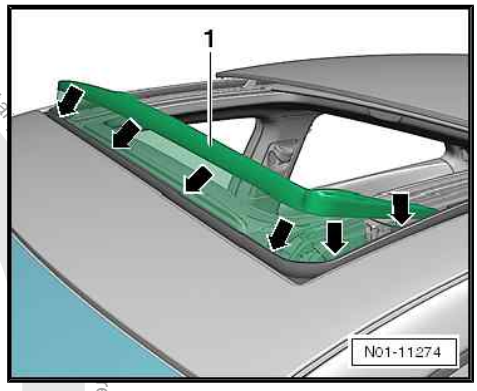

4.31.9 Guide plate: locking

Note

If the blocking element of the control guide becomes disengaged during cleaning or lubricating operations, do not operate the panorama slide sunroof. Danger of damage!

Engage control guide as follows:

- Carefully push control guide lever -green- downwards.
- Using a screwdriver, carefully push blocking element -blue- over lever -green- from side.

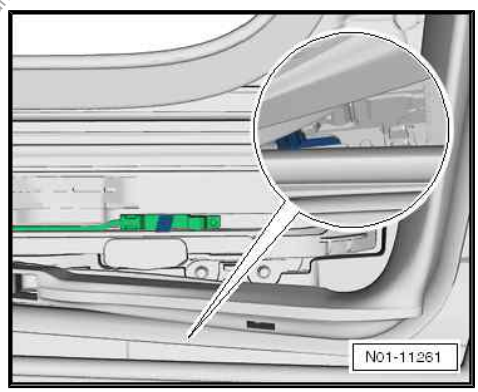

4.32 Road test: performing (driving behaviour, noises, air conditioner etc.)

Which of the following can be checked depends on vehicle equipment and local conditions (urban/country).

Check the following during a road test:

Note

- *Valid only for the e-up!*
- *Three-phase current display: Calibrating (40 km/h >5 sec.)*

- Engine: output, misfiring, idling speed, acceleration
- Clutch: pulling away, pedal pressure, odours
- Gear selection: ease of operation, stick position
- Automatic gearbox: Selector lever position, shift lock/ignition key removal lock, shift behaviour, dash panel insert display
- Foot brake and handbrake: function, free travel and effectiveness, pulling to one side, juddering, squeal
- ABS function: pulsing must be felt at the brake pedal during ABS-regulated braking
- Steering: function, steering free clearance, steering wheel centred when vehicle is travelling straight ahead
- Tilting roof: function
- Radio/radio navigation system: function, reception, GALA, interference noise
- Multi-function indicator (MFI): functions
- Air conditioning system: check function (At low temperatures the function of air conditioner must be checked in a workshop).
- Vehicle: pulls to one side when travelling straight ahead (level road).
- Imbalance: wheels, drive shafts, propshaft
- Noise/vibration: wheel bearing, exhaust system
- Engine: hot starting behaviour

4.33 Wheel securing bolts: tightening to specified torque

- Pulling off wheel hub trim: ⇒ page 82
- Pulling off wheel trim ⇒ page 82
- Pulling off wheel bolt caps: ⇒ page 82
- Loosening/tightening anti-theft wheel bolts ⇒ page 83
- Tightening wheel bolts ⇒ page 83
- Installing wheel centre cover, wheel bolt cover caps and wheel cover ⇒ page 84

Pulling off wheel hub trim

Caution

On vehicles with light alloy wheels do not lever wheel hub trim off with screwdriver, only use the special tool for this purpose (puller hook in vehicle tool kit).

The puller hook -1- to remove the cover caps is located with the vehicle tool kit.

– Hook puller hook into one drilling of wheel hub trim and pull off in -direction of arrow-.

Pulling off wheel trim

– On vehicles with wheel trim, loosen wheel trim all around as shown, e.g. using puller hook and wheel brace from vehicle tool kit -A- and pull off -arrow B-.

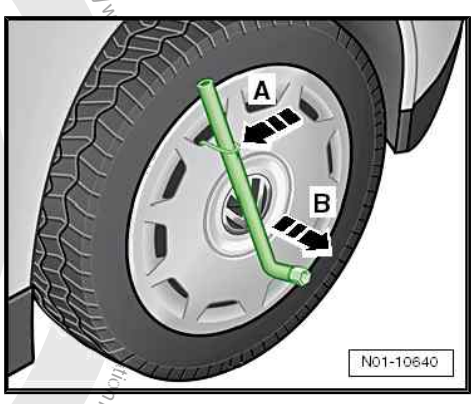

Pulling cover caps off wheel bolts

Caution

On vehicles with light alloy wheels do not lever wheel bolt caps off with screwdriver, only use the special tool for this purpose (puller hook in vehicle tool kit).

Note

Before loosening or tightening the wheel bolts, remove the cover caps.

The puller hook to remove the cover caps is located with the vehicle tool kit.

– Place the puller hook through opening in cover cap.

– Pull off cap using the puller hook.

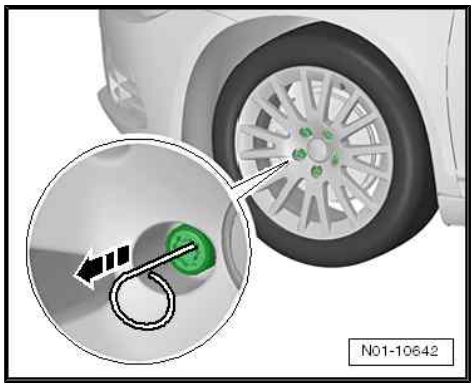

Loosening/tightening anti-theft wheel bolts

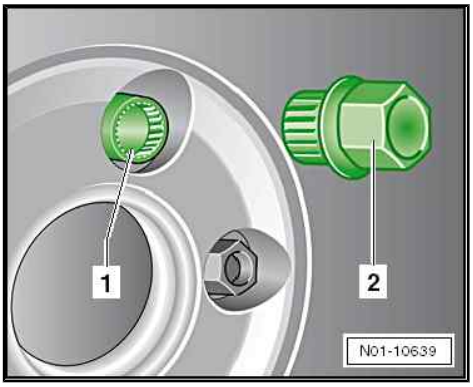

Note

- *To loosen/tighten the anti-theft wheel bolts a special adapter, located in vehicle tool kit, is required.*
- *To loosen the anti-theft wheel bolts (lockable wheel bolts) do not use an impact screwdriver.*
- *If the adapter to loosen or tighten the anti-theft wheel bolts is not available in the vehicle, use the corresponding adapter set for tamper-proof wheel bolts.*

Special tools and workshop equipment required

- Adapter set for tamper-proof wheel bolts - T10313-

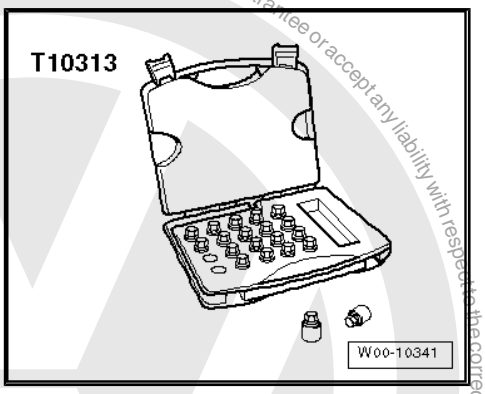

- Torque wrench - V.A.G 1332-

– Slide adapter -2- into anti-theft wheel bolt -1- onto stop.
– Slide the wheel bolt wrench onto adapter -2- onto stop.

Tightening wheel bolts

– Tighten the wheel bolts diagonally and alternately to the following torque setting:

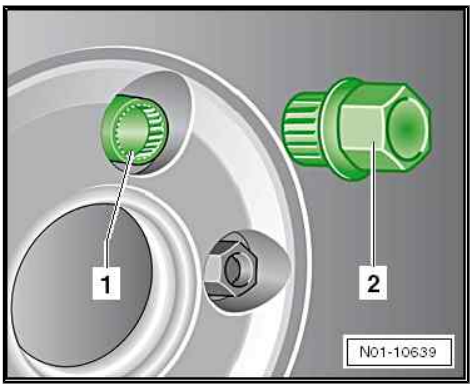

Specified torque	Nm
Wheel bolts	110

WARNING

Never use an impact screwdriver to tighten the wheel bolts!

Installing wheel centre cover, wheel bolt cover caps and wheel cover

– Push wheel hub trim into opening of wheel hub. Ensure that -A and B- are accurately fitted on rim.

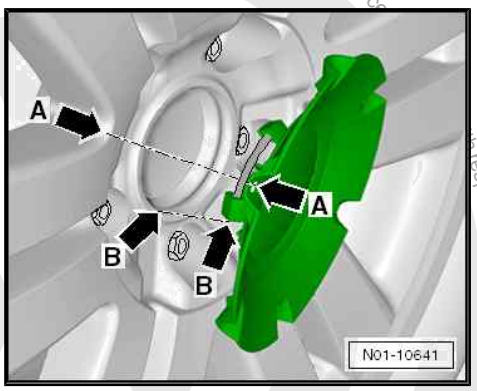

Fit cover caps on wheel bolts.

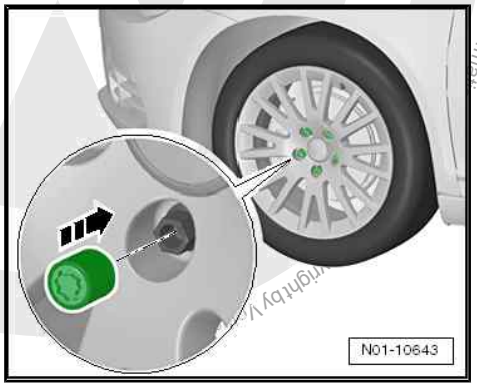

Install wheel trim by inserting trim evenly into steel wheel. Ensure that valve -B- seats in cut-out -A- of wheel trim.

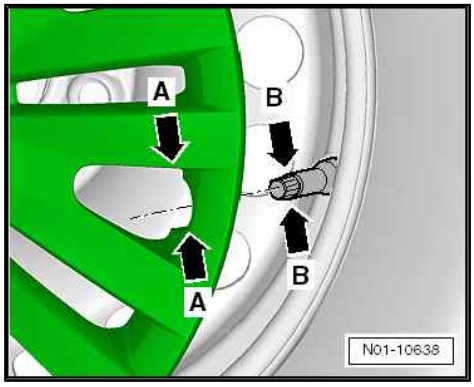

Note

Place adapter and puller hooks properly in vehicle tool kit after completing work.

4.34 Radio code: reading using vehicle diagnostic tester

Authorization prerequisites for vehicle diagnostic tester

- The vehicle diagnostic tester is connected via the Central Partner Network (CPN) to the central database (Carport, Fazit).
- Available access for the user of the system “GeKo” (secrecy and component protection)

Note

- *The radio codes are also called security codes, they can be read in the central database and displayed on the vehicle diagnostic tester display.*
- *For radio activation the codes must be entered via radio buttons, as previously* ⇒ page 85 *.*

ODIS Service
– Connect vehicle diagnostic tester
– Switch on ignition.
– Carry out identification of vehicle.
– Enter task data, or select “Without task”.
– Select “Control units”.
– Select “Radio”.
– Select “Guided Functions”.
– Select “Read radio code”.
– Follow instructions in “Guided functions” mode.

4.35 Radio/navigation system: entering PIN of anti-theft coding and storing local radio stations to station buttons

The anti-theft coding electronically prevents unauthorized persons from operating the unit after it has been removed from vehicle. The anti-theft codes are also called radio codes or security codes. Security code means that each unit with an anti-theft coding is programmed with its own code number. This security code is not active when leaving the factory. The security code is found on the unit card, if fitted. If the unit card is not fitted, the security code can be read using vehicle diagnostic tester of a central database ⇒ page 84 .

Note

If an incorrect code number is entered when releasing the electronic lock, the whole procedure can be repeated once. If an incorrect code number is entered again, the unit is locked for about one hour. That means, it cannot be used. After one hour, during which time the unit must remain switched on, the display extinguishes. The electronic lock can be released as described above. The cycle, two attempts, one hour lock, applies again.

Procedure

⇒ Communication; Rep. gr. 91 ; General notes for radio and radio navigation systems

4.36 Tyre pressure monitoring : performing basic setting

Note

- *The basic setting of tyre pressure monitoring must only be performed "after" the tyre pressure has been corrected to the prescribed values.*
- *If no pressure loss and tyre damage are found after a tyre pressure warning, the incorrect warning can be rectified by a basic setting.*

The tyre pressure monitoring warning lamp compares the speed and the rolling circumference of the individual wheels via the ABS sensors. When the rolling circumference of one wheel is changed this is displayed by the tyre pressure monitoring. The rolling circumference of tyre changes if:

- The tyre pressure is too low.
- The tyre has structural damage.
- The vehicle is loaded more heavily on one side.
- The wheels on one axle are loaded more heavily (e.g. when towing a trailer or when driving in mountains).
- Snow chains are fitted.
- The temporary spare wheel is fitted.
- One wheel per axle has been changed.

Perform basic settings

– Switch on ignition.

– Press SET button in centre console until confirmation sound is heard.

4.37 Tyre repair set: checking

Depending on level of equipment, vehicles are equipped with either a spare wheel or a tyre mobility set.

The tyre mobility set can be found in the luggage compartment where normally the spare wheel would sit. The tyre mobility set consists of a compressor -2- and a bottle of tyre sealant -1-.

Expiry date: checking

– Check the expiry date.

The expiry date is printed on a sticker on the tyre sealant container -arrow-.

– Enter the expiry date in maintenance table.

– Renew tyre sealant if the expiry date has been reached. (The tyre sealant must not be more than 4 years old).

Note

- *If the tyre sealant has been used, the container must be renewed.*
- *Please observe disposal instructions!*

4.38 Window wash/wipe system and head-light washer system: checking function

Checking anti-freeze protection of fluid, topping up fluid
⇒ page 87

Window wash/wipe system: check spray jet settings and adjust necessary ⇒ page 88 .

Windscreen wiper blades: check park position ⇒ page 90 .

Rear window wiper blades: checking park position ⇒ page 90

4.38.1 Anti-freeze: checking protection of fluid, topping up fluid if necessary

Special tools and workshop equipment required

- Refractometer - T10007 A-

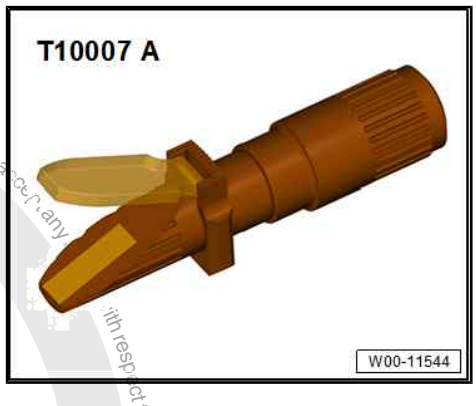

Note

In countries and regions where no frost occurs due to the local climatic conditions, the anti-freeze protection does not need to be checked.

Read precise value for the following tests at light/dark boundary. Using a pipette, place a drop of water on the glass to improve the readability of the light/dark boundary. The light-dark border can be clearly recognised on the “WATERLINE”.

– Check concentration of anti-freeze additive using refractometer - T10007 A-

The scale -4- of the refractometer is applicable for the anti-freeze protection of the window wash/wipe system.

Mixing ratio:

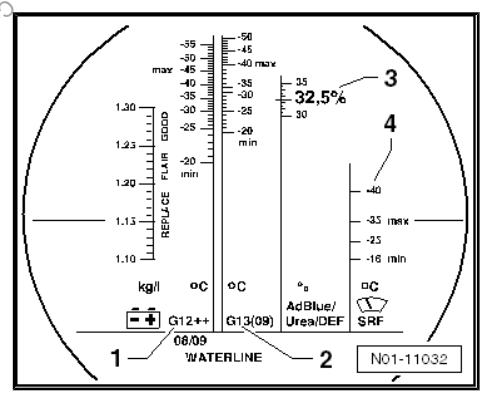

Frost protection to	Genuine washer fluid ⇒ ETKA	Water
-17/-18°C	1 part	3 parts
-22/-23 °C	1 part	2 part

Frost protection to	Genuine washer fluid ⇒ ETKA	Water
-37/-38 °C	1 part	1 part

– Top up fluid in window wash/wipe system (only if customer requests to do so).

Use genuine washer fluid ⇒ ETKA throughout all year to fill window wash/wipe system.

Depending on season, a winter product with anti-freeze protection or a summer product with increased cleaning capabilities should be used.

Ready-to-use window cleaner (Ready Mix) does not need to be mixed with water.

Note

- *Genuine washer fluid ⇒ ETKA prevents the spray jets, washer fluid reservoirs and connecting hoses from freezing.*
- *In vehicles with fan jets, the reservoir must be filled with Genuine washer fluid, as this fluid has a low viscosity at temperatures below freezing. Otherwise the complicated spray jet system can become blocked by the crystallised washer fluid, which affects the spray pattern of the spray jet. Genuine washer fluid ensures that the fan jets remain fully functional at low temperatures.*
- *Genuine washer fluid ⇒ ETKA can also be used in the summer. The powerful cleanser easily removes wax and oil residue from the glass.*
- *Frost protection must be guaranteed to approx. -25°C (approx. -35°C in countries with an arctic climate) in the windscreen wash/wipe system.*

4.38.2 Window wash/wipe system: checking spray jet settings and adjusting if necessary

Special tools and workshop equipment required

- Adjusting tool - T10564-

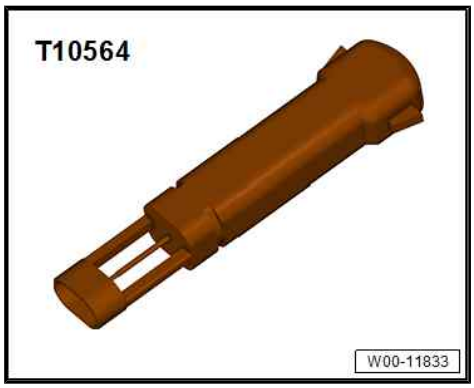

♦ Adjusting tool - T40187-

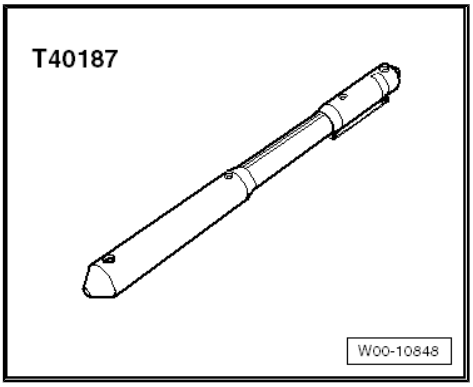

Note

If the spray field is uneven due to soiling in the spray jet, remove the spray jet. Rinse it then with water opposite to direction of spray. Subsequent blowing through with compressed air against the spraying direction is permitted. Never use solid objects to clean the washer jets!

Windscreen spray jet settings:

The spray jets are preset. However, small differences in height may be corrected.

– If both spray fields are not at same height, adjust spray direction upwards or downwards as follows:

– Move adjuster with spray jet -1- upwards or downwards to the right adjustment position.

1 - Adjuster with jet

2 - Cowl panel in front of windscreen

3 - Bonnet

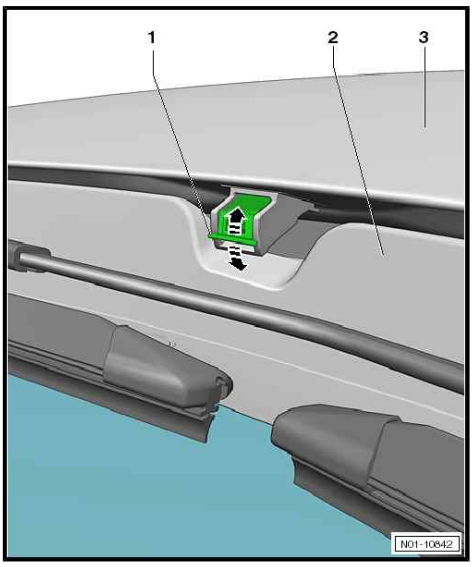

Rear window spray jet setting:

– Adjust spray jet using adjusting tool - T10564- or adjusting tool - T40187- so that the water jet sprays onto the upper third of rear window.

a - approx. 115 mm

b - approx. 45 mm

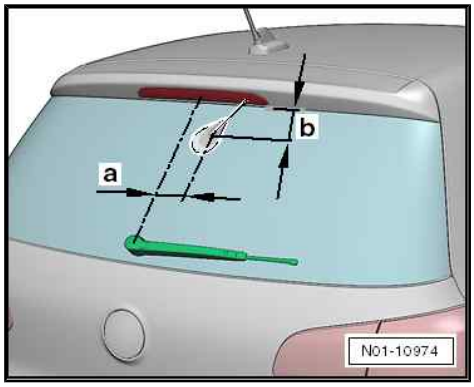

Note

If the vehicle is equipped with a fan jet on its rear window, the fan jet cannot be adjusted.

4.38.3 Wiper blades: checking park position

Procedure

⇒ Electrical system; Rep. gr. 92 ; Windscreen wiper system; Adjusting windscreen wiper arms

Note

- *Adjusting the wiper blades is a repair measure.*
- *The repair measure is carried out subject to a separate charge.*

4.38.4 Rear window wiper blade: checking park position

Procedure

⇒ Electrical system; Rep. gr. 92 ; Rear window wiper system; Adjusting wiper arm

Note

- *Adjusting the wiper blades is a repair measure.*
- *The repair measure is carried out subject to a separate charge.*

4.39 Wiper blade protection: removing

Note

There are 3 different versions of wiper blade protection:

Version 1: wiper blade with protective strip and 2 securing clips

- Identification, protective strip with two securing clips -arrows 1 + 2-

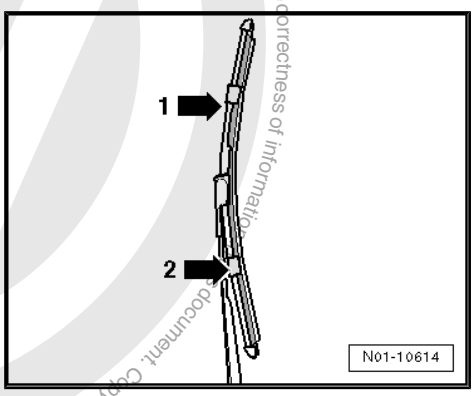

Wiper blade protection, version 1: removing ⇒ page 91

Version 2: wiper blade with slide-on protective strip

- Identification, blade protector -arrow- is slid on wiper blade

Wiper blade protection, version 2: removing ⇒ page 92

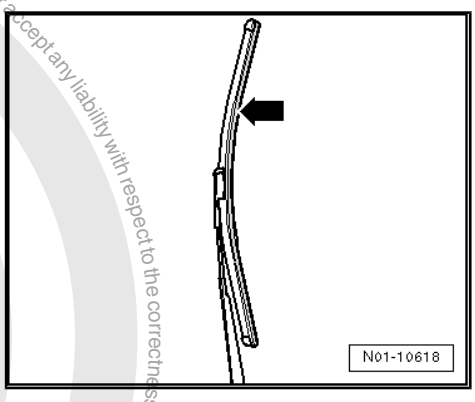

Version 3: transport wiper blade

- Identification: the transport wiper blade is fitted without wind deflector and must be replaced by the standard wiper blade.

Wiper blade protection, version 3: removing "transport wiper blade" ⇒ page 92

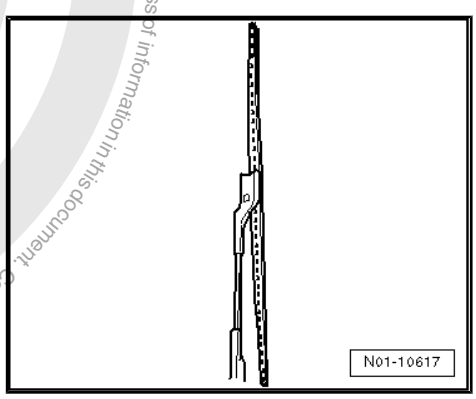

4.39.1 Wiper blade protection, version 1: removing

– Switch ignition on and off briefly with bonnet closed.

– When engine is switched off, move wiper lever down to touch-wipe function within 10 seconds.

The wiper blades move to the service position.

– Lift the wiper arm away from windscreen.

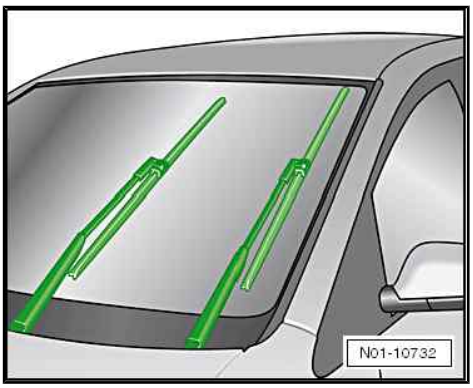

> ⚠ **Caution**
>
> ***When doing this, do not touch the wiper blade to prevent damage.***

– Remove upper securing clip upwards and lower securing clip downwards -arrows-.

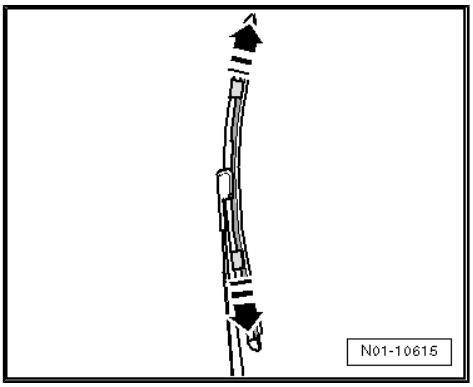

– Pull protective strip off wiper blade from bottom to top, as shown in illustration.
– Carefully place wiper arm back onto windscreen.
– Switch ignition on and briefly press the wiper lever to move the wipers back to park position. Switch ignition off again.

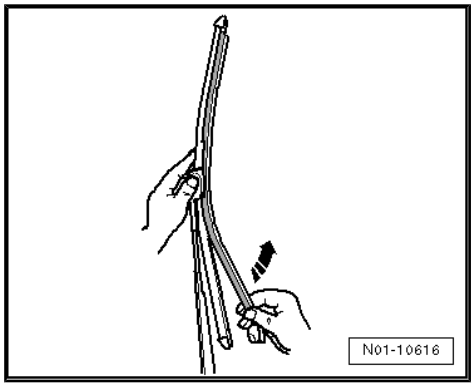

4.39.2 Wiper blade protection, version 2: removing

– Switch ignition on and off briefly with bonnet closed.
– When engine is switched off, move wiper lever down to touch-wipe function within 10 seconds.

The wiper blades move to the service position.

– Lift the wiper arm away from windscreen.

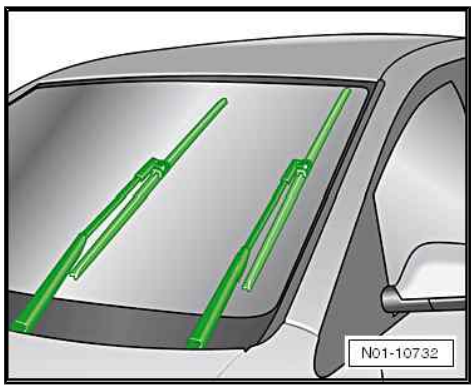

> ⚠ **Caution**
>
> ***When doing this, do not touch the wiper blade to prevent damage.***

– Pull protective strip off wiper blade upwards, as shown in illustration.
– Carefully place wiper arm back onto windscreen.
– Switch ignition on and briefly press the wiper lever to move the wipers back to park position. Switch ignition off again.

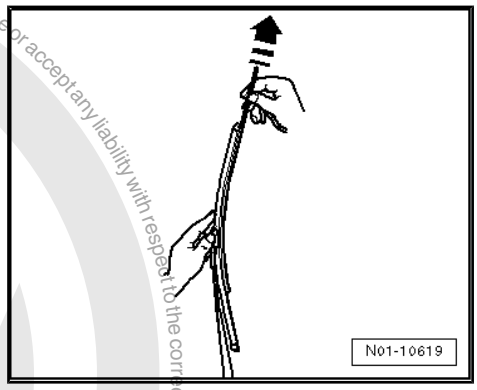

4.39.3 Wiper blade protection, version 3: removing “transport wiper blade”

– Switch ignition on and off briefly with bonnet closed.
– When engine is switched off, move wiper lever down to touch-wipe function within 10 seconds.

The wiper blades move to the service position.

– Lift the wiper arm away from windscreen.

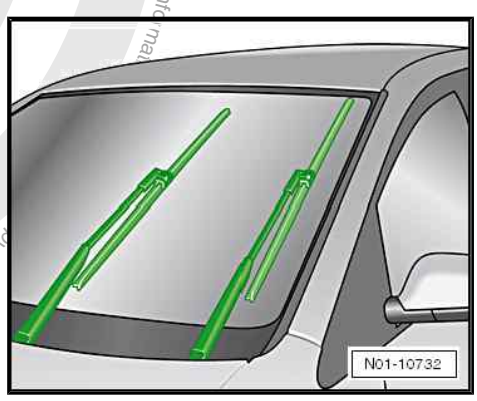

– Depending on type, turn wiper blade with lip upwards and pull it off. Or detach the wiper blade at the hinged point -3- by pressing the locking element -1- in the holder -2- and pulling out the wiper blade.

– Slide the standard wiper blade into mounting and ensure that it audibly engages.

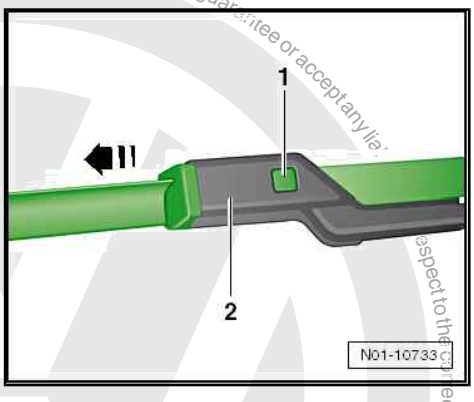

Caution

When doing this, do not touch the wiper blade to prevent damage.

– Carefully place wiper arm back onto windscreen.

– Switch ignition on and briefly press the wiper lever to move the wipers back to park position. Switch ignition off again.

4.40 Headlight adjustment: checking halogen headlights

Note

- *Additional weights are no longer used.*
- *Instead, a different inclination setting on the headlight adjustment unit is used.*
- *If the maintenance tables are used, the settings are displayed in the vehicle-specific maintenance list as of model year 2014.*
- *In the US, Canadian and Mexican markets SAE-compliant headlights are used.*
- *As of model year 2014 the headlight adjustment is subject to a separate charge.*

Test and adjustment prerequisites ⇒ page 93

Check headlight adjustment (ECE). ⇒ page 93

Check headlight adjustment (SAE). ⇒ page 94

Halogen headlights: Adjusting ⇒ page 96

4.40.1 Test and adjustment conditions

- Tyre pressure OK
- Lenses must not be damaged or dirty.
- Reflectors and bulbs OK.
- The vehicle must be rolled forward and backward several metres or front and rear springs must be bounced fully several times so that springs settle.
- Vehicle and headlight adjuster must be on a level surface.
- Vehicle and headlight adjuster must be aligned.
- Inclination must be set.
- Refer to the ⇒ operating instructions for headlight adjustment units .

4.40.2 Headlight adjustment (ECE): adjusting

Special tools and workshop equipment required

- Headlight adjustment unit - VAS 5046 A-
- Headlight adjustment unit - VAS 5047 A-
- Headlight adjustment unit - VAS 621 001-

Note

For certain export markets, halogen headlights with manually regulated headlight range control are not offered.

– Check headlight height adjustment by setting the maximum level and monitoring the headlights' light.

– If fitted, then set the headlight range control thumb wheel to position 0.

The inclination on the headlight adjustment unit is set according to the fuel level in the fuel tank.

Inclination setting for ECE-compliant headlights

Fill level of fuel gauge	Inclination
0 to 1/2	1.3%
1/2 to 1	1.0%

Inclination for halogen headlights on the ECE e-up! & CNG-up!

Inclination
1.0%

Test pattern with dipped headlights

Check the following:

– Whether, with the dipped beam switched on, the horizontal bright/dark boundary contacts the dividing line -1- of the test area and

– Whether the breaking point -2- between the horizontal part of the bright/dark boundary on the left and the rising part on the right lies on the vertical line of the central point -3-. The bright core of the light beam must be to the right of the vertical line.

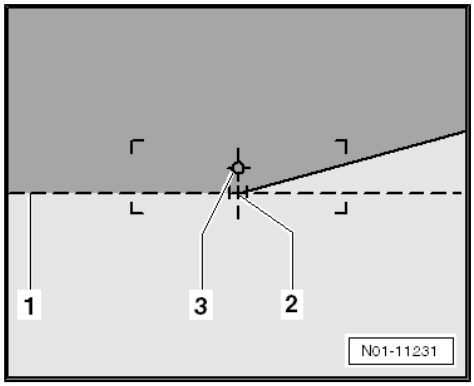

Note

- *To simplify the determination of the breaking point -2-, cover and uncover left (from driver perspective) half of the headlight a few times. Then check dipped beam again.*
- *After correct adjustment of dipped beams, the centre point of the main beam must lie on the centre mark -3-.*

4.40.3 Headlight adjustment (SAE): checking

Special tools and workshop equipment required

- Headlight adjustment unit - VAS 5046 A-
- Headlight adjustment unit - VAS 5047 A-
- Headlight adjustment unit - VAS 621 001-

Note

- *The VOL/VOR marking is visible on the outside the headlight.*
- *The lateral adjustment mechanism is sealed on SAE-compliant headlights.*
- *For certain export markets, halogen headlights with manually regulated headlight range control are not offered.*

– Check headlight height adjustment by setting the maximum level and monitoring the headlights' light.

– If fitted, then set the headlight range control thumb wheel to position 0.

The inclination on the headlight adjustment unit is set according to the fuel level in the fuel tank.

Inclination for SAE VOL halogen headlights

Fill level of fuel gauge	Inclination
0 to 1/2	1.0%
1/2 to 1	0.7%

VOL: Visual Optical Aim Left -1-

– Check whether the left horizontal light-dark border touches the separating line -1- in the test area of the headlight adjustment unit.

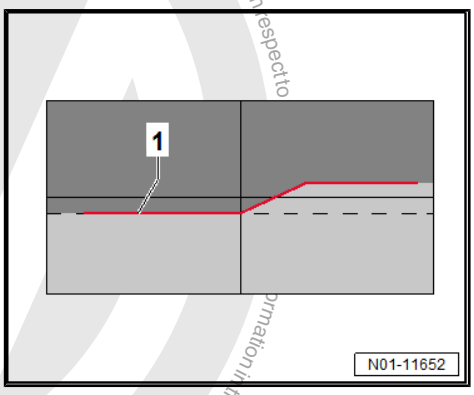

Inclination for SAE VOR halogen headlights

Fill level of fuel gauge	Inclination
0 to 1/2	0.3%
1/2 to 1	0.0%

VOR: Visual Optical Aim Right -2-

– Check whether the right horizontal light-dark border touches the separating line -2- in the test area of the headlight adjustment unit.

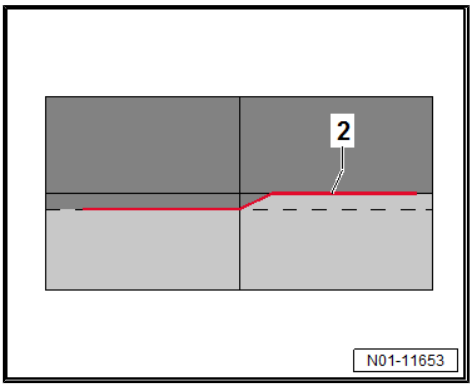

4.40.4 Halogen headlights: adjusting

Note

As of model year 2014 the headlight adjustment is subject to a separate charge.

Adjusting right headlight:

The adjustment bolts for the left headlight are a mirror image.

- ♦ Lateral adjustment bolt (hexagon socket insert) of bright/dark boundary for dipped beam -1-
- ♦ Height adjustment screw (hexagon socket insert) of bright/dark boundary for dipped beam -2-
- – First turn height adjustment bolt of bright/dark boundary -2-.
- – Then check lateral adjustment, if necessary correct with adjustment screw -1-.

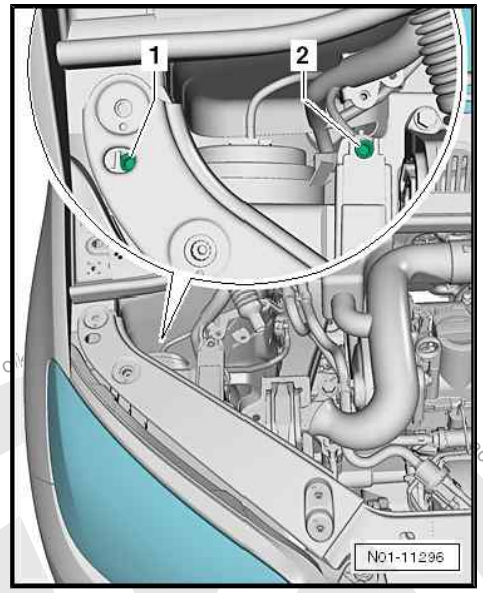

4.41 Headlight adjustment: checking fog lights

Note

- ♦ *Additional weights are no longer used.*
- ♦ *Instead, a different inclination setting on the headlight adjustment unit is used.*
- ♦ *If the maintenance tables are used, the settings are displayed in the vehicle-specific maintenance list as of model year 2014.*
- ♦ *As of model year 2014 the headlight adjustment is subject to a separate charge.*

Test and adjustment conditions ⇒ page 96

Check headlight adjustment. ⇒ page 97

Adjusting fog lights and other auxiliary lights. ⇒ page 97

4.41.1 Test and adjustment conditions

- Tyre pressure OK
- Lenses must not be damaged or dirty.
- Reflectors and bulbs OK.
- The vehicle must be rolled forward and backward several metres or front and rear springs must be bounced fully several times so that springs settle.
- Vehicle and headlight adjuster must be on a level surface.

- Vehicle and headlight adjuster must be aligned.
- Inclination must be set.
- Refer to the ⇒ operating instructions for headlight adjustment units .

4.41.2 Headlight adjustment: checking

Special tools and workshop equipment required

- ♦ Headlight adjustment unit - VAS 5046 A-
- ♦ Headlight adjustment unit - VAS 5047 A-
- ♦ Headlight adjustment unit - VAS 621 001-

The inclination on the headlight adjustment unit is set according to the fuel level in the fuel tank.

Inclination setting for fog lights

Fill level of fuel gauge	Inclination
0 to 1/2	2.3%
1/2 to 1	2.0%

Fog lights:

– Check whether the upper light-dark border touches the setting line and runs horizontally over the entire width of the test screen.

Other additional lights:

Additionally retrofitted lights of other systems must be checked and set according to valid guidelines.

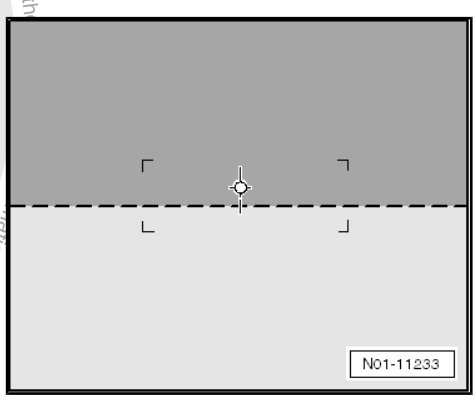

4.41.3 Fog lights and other auxiliary lights: adjusting

Note

As of model year 2014 the headlight adjustment is subject to a separate charge.

Fog light on left in bumper

Location of adjustment screw on right fog light is a mirror image.

– Turn adjustment screw -arrow- to adjust beam range.

There is no provision for lateral adjustment.

Other additional lights

Additionally retrofitted lights of other systems must be checked and set according to valid guidelines.

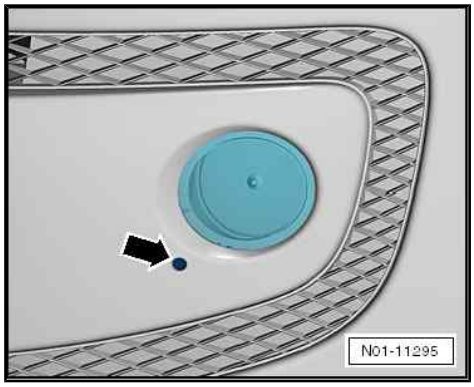

4.42 Service interval display: resetting

Resetting service interval display using vehicle diagnostic tester ⇒ page 98

Resetting service interval display without vehicle diagnostic tester ⇒ page 98

Additional information for service interval display ⇒ page 4

The service interval display must be reset (adapted) during

- delivery inspection
- Every oil change service and interval service.
- Every inspection with oil change

is carried out!

4.42.1 Service interval display: resetting using vehicle diagnostic tester

– Reset service interval display ⇒ Vehicle diagnostic tester.

– Select the respective service which is to be reset.

4.42.2 Service interval display: resetting without vehicle diagnostic tester

Only applies up to model year ►2016 ⇒ page 98

Applies as of model year 2017► ⇒ page 99

Only applies up to model year ►2016

With function buttons on dash panel insert

– Switch off ignition and press button -3-.

– Keep button -3- pressed and switch on ignition.

The service interval display is now in the resetting mode.

The letters “INSP” appear.

– Release button -3- and press briefly button -3- within 20 seconds.

After a short time the display switches back to the original display.

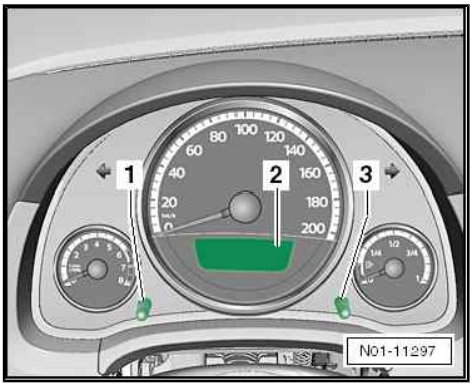

With rocker switch on windscreen wiper lever

– Using rocker switch on windscreen wiper lever, select menu “Settings”.

– Mark menu option “Reset” in sub-menu “Service”, and reset service interval display by pressing OK button -1- on windscreen wiper lever.

– Then confirm the confirmation dialogue with OK button again.

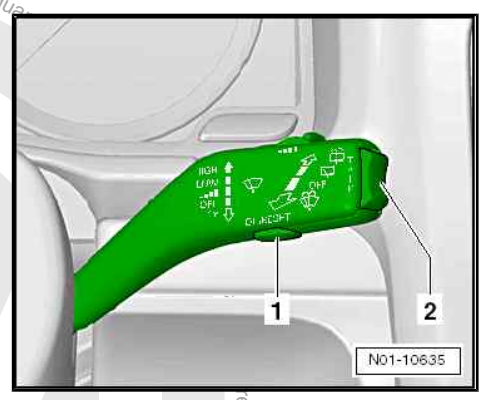

Applies as of model year 2017►

Resetting oil change service

Function button on dash panel insert:

– With ignition switched off, press and hold button -3-.

– Switch on ignition.

Wait until “Reset oil change service?” appears on the display.

– Release button -3-.

The service interval display is now in the resetting mode.

– Briefly press button -3- once.

After a short time the display switches back to the original display.

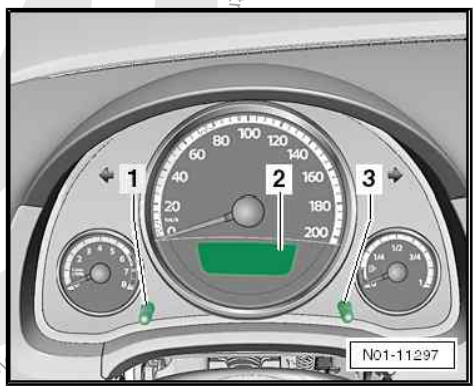

Resetting inspection

With function button on dash panel insert

– With ignition switched off, press and hold button -3-.

– Switch on ignition.

Wait until “Reset inspection?” appears on the display. on the display.

– Release button -3-.

The service interval display is now in the resetting mode.

– Briefly press button -3- once.

After a short time the display switches back to the original display.

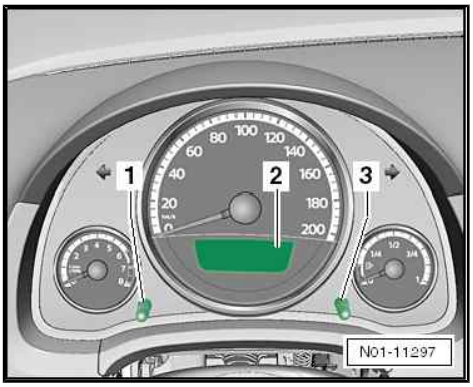

4.43 Track rods: checking clearance, attachment and boots

Procedure

– Check play by moving track rods and wheels with the vehicle raised (wheels hanging free). Clearance (specified): no clearance:

– Check that boots -arrow- are not damaged and are seated correctly.

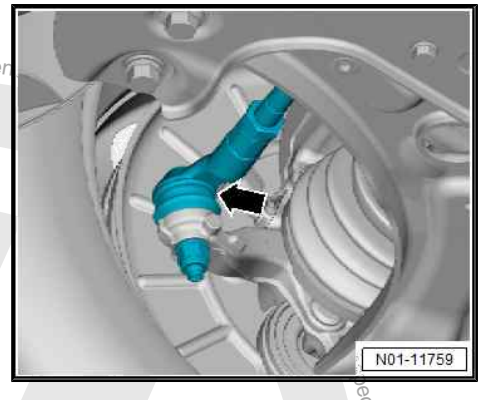

– Make sure that boots -1- of steering rack are not damaged and are seated correctly.

– Perform visual inspection for leaks and damage in area of steering rack including track rods.

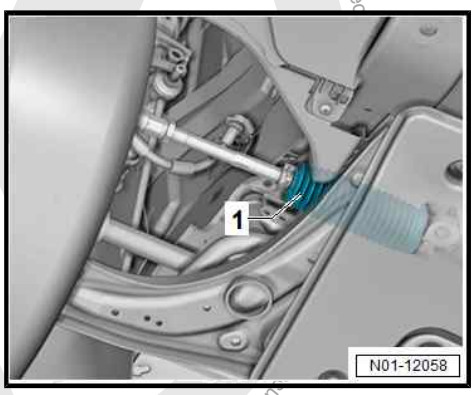

4.44 Dust and pollen filter: cleaning housing and renewing filter element

Procedure

⇒ Heating, air conditioning; Rep. gr. 87 ; Front heater and air conditioning unit; Removing and installing dust and pollen filter .

4.45 Transportation mode: switching off

Note

- *The transportation mode is responsible for assuring the starting capability of vehicle.*
- *Battery discharging is reduced by the transportation mode, because electrical consumers are switched off.*
- *All vehicle functions which are not necessarily used during vehicle transportation and require no-load voltage or battery capacity are switched off with the activated transportation mode, with regard to the service life of battery.*
- *These are especially all functions in the vehicle which can reduce the battery capacity when being misused.*
- *Examples are radios, electronically operated flaps and attachments and anti-theft alarm systems which can produce faults during transportation.*

– Switch transportation mode off/on ⇒ Vehicle diagnostic tester.

4.46 Transportation devices: removing blocking pieces

Note

- *On some models blocking pieces are fitted to the suspension strut piston rod.*
- *The blocking pieces prevent the springs compressing and possible damage to the vehicle when being driven onto a vehicle transporter or railway wagon.*

WARNING

The blocking pieces must be removed without reservation before delivering the vehicle. A notice reading "Warning!" and attached to the interior mirror, specifically reminds of this.

– Vehicles with blocking pieces fitted to the suspension struts have a label hanging from the mirror -arrow-.

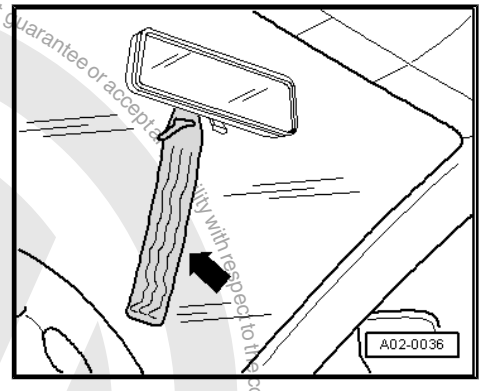

Removing blocking pieces on piston rod

– Relieve weight on coil springs by raising vehicle with a hoist.

– Slide suspension strut protective sleeve -arrow- upwards.

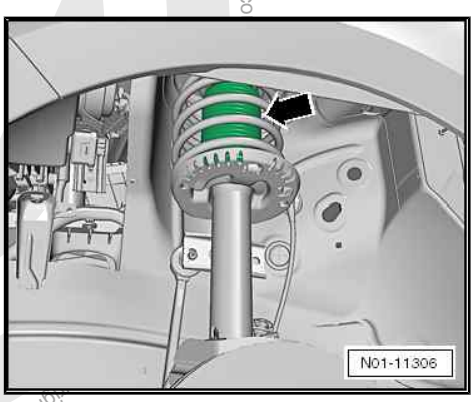

– Push blocking piece -arrow- off piston rod.

– Slide suspension strut protective sleeve downwards onto suspension strut.

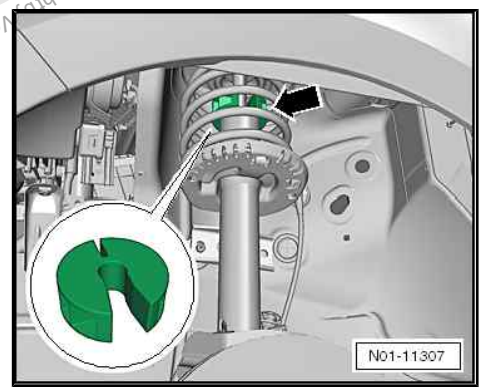

4.47 Clock and date: setting

Clock with buttons in dash panel insert, version 1

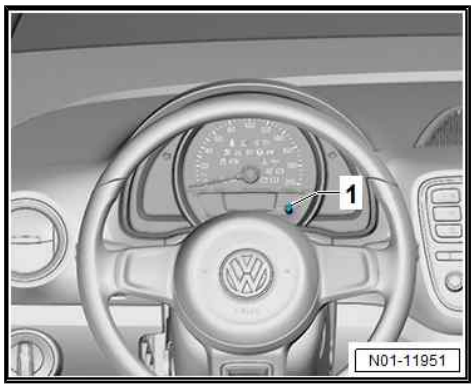

The clock can be set when the time is displayed in the dash panel insert and is not overlaid with another display.

- Switch on ignition.
- Press button -1- until entire time display is flashing.
- Release button -1- and then press until hour display is flashing.
- Press button -1- briefly to advance time one hour.
- Press button -1- until minute display is flashing.
- Press button -1- briefly to advance time one minute.
- Press and hold button -1- to confirm entry.
- Switch off ignition.

Clock with buttons in dash panel insert, version 2

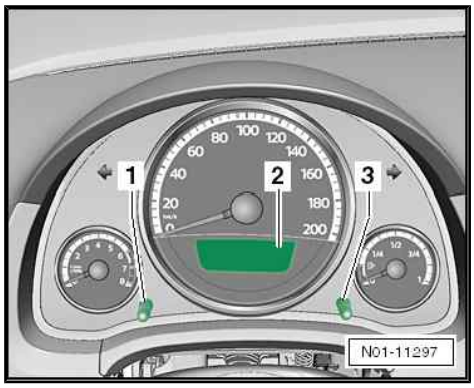

The clock can be set when the time is displayed in the dash panel insert and is not overlaid with another display.

The time is set using buttons -1- and -3- in the dash panel insert.

- Switch on ignition.
- Press button -1- to select hour display on dash panel insert display.
- Press button -3- briefly to advance time one hour. Keep the button pressed to fast-forward through the hours.
- Press button -1- again to select minute display.
- Press button -3- briefly to advance time one minute.
- Keep the button pressed to fast-forward through the minutes.
- Press button -1- again to conclude setting time.
- Switch off ignition.

Setting clock and date with buttons on windscreen wiper lever

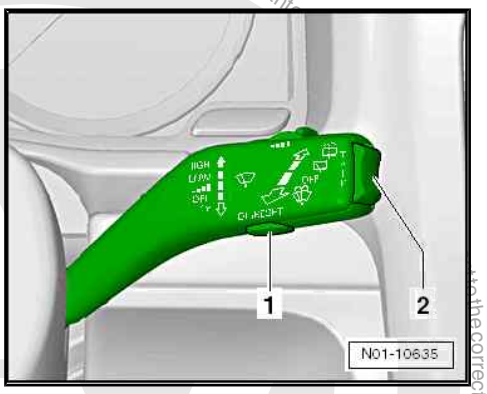

- Switch on ignition.
- Press button -2- for 2 seconds to open main menu.
- Now press button -2- to select “Settings” menu. Confirm this with button -1-.
- Now press button -2- to select “Time” menu and confirm with button -1-.
- Now mark the menu option “Hours” by pressing button -1-, set correct hour with button -2- and confirm with button -1-.
- Use same procedure for “Minutes” menu option.
- Exit “Settings” menu with menu option “Back”.
- Select “MFD” as current display and confirm with button -1-.
- Switch off ignition.

4.48 Underbody: inspecting for damage to underbody sealant, underbody panels, routing of lines, plugs

Caution

- *During inspection, also check floor pan, wheel housings and sills.*
- ♦ *Always ensure that all lines are secured in their mountings, all plugs are available and that there is no visible damage on the underbody.*
- ♦ *Faults found must always be rectified (repair measure). This inhibits corrosion and rusting through.*

4.49 Water drain valves at rear: check for blockage, clean if necessary

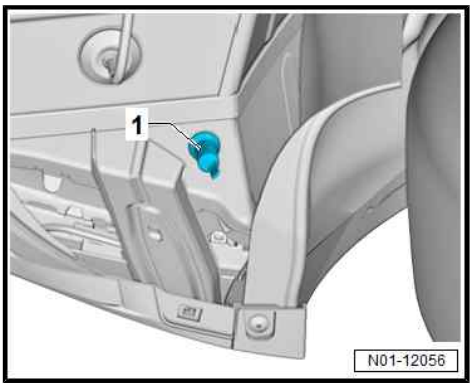

– Open rear left water drain valve -1-, check it for damage, and remove any blockages.

– Repeat procedure on other side of vehicle.

4.50 Toothed belt (petrol engines): renewing

Camshaft drive toothed belt: renewing, petrol engines

– ⇒ Rep. gr. 15 ; Toothed belt drive; Removing and installing toothed belt

Coolant pump toothed belt: renewing, petrol engines

– ⇒ Rep. gr. 19 ; Coolant pump/thermostat assembly

4.51 Spark plugs: renewing

Renewing spark plugs, 1.0 l manifold injection engines ⇒ page 104

Spark plugs: renewing, 1.0 l TSI engine ⇒ page 105

Special tools and workshop equipment required

♦ Puller - T10530-

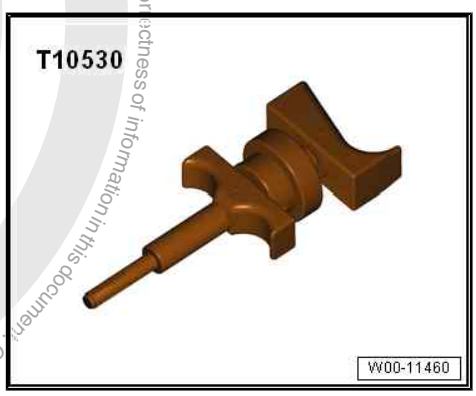

- Spark plug socket - 3122 B-

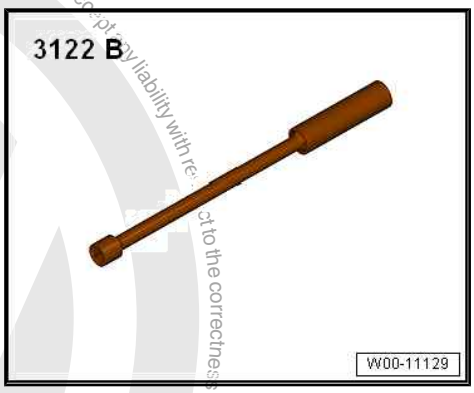

- Torque wrench - V.A.G 1331-

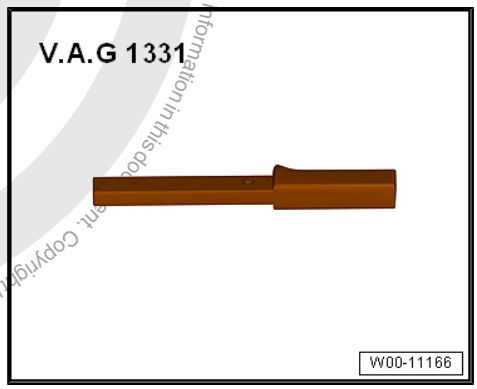

4.51.1 Spark plugs, 1.0 l manifold injection engines: renewing

Removing

– Remove air filter housing. ⇒ page 64

– Release connectors -1- and pull them off ignition coils with output stages.

– Remove bolts -2-.

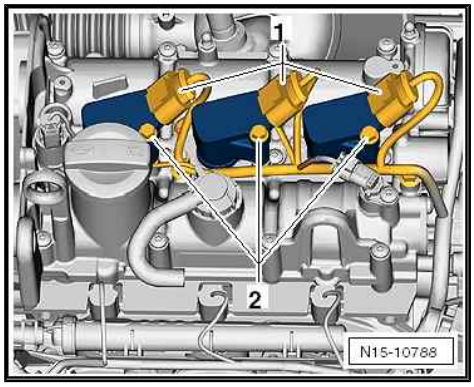

– Push puller - T10530- as far as stop into hole in ignition coil -1-.

– Tighten knurled nut -2- in -direction of arrow-.

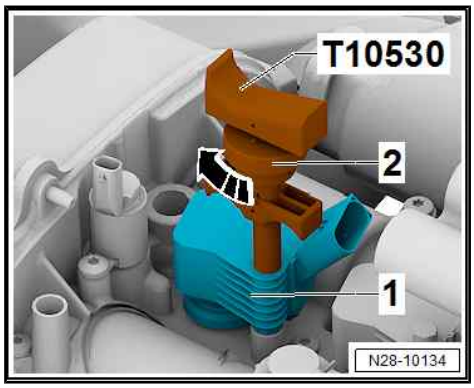

– Pull ignition coil on puller - T10530- in -direction of arrow- out of cylinder head cover.

Repeat step for all ignition coils with output stage.

– Unscrew spark plugs using spark plug socket and extension - 3122 B- .

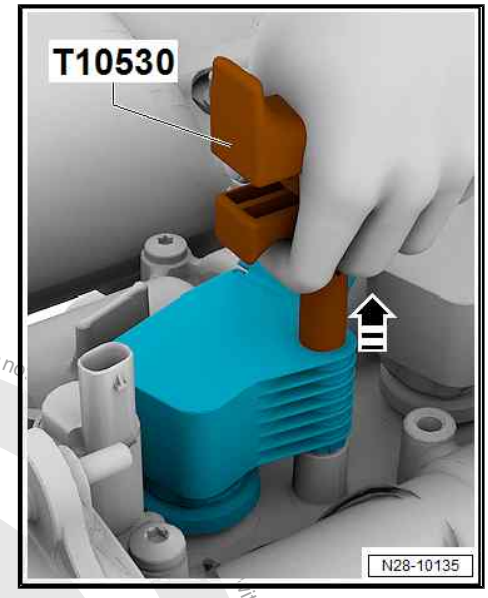

Installing

Note

- *When installing new spark plugs, regrease ignition coils with output stage using silicone paste ⇒ ETKA .*
- *The applicable silicone paste is stated in the ETKA along with the corresponding ignition coil and/or spark plug.*

– Screw in new spark plugs and tighten them to specified torque using spark plug socket - 3122 B- .

– Apply a thin bead of silicone paste on the circumference of the sealing hose of the ignition coil with output stage -arrow-.

– Insert ignition coils with output stages into cylinder head.

– Screw in securing bolts -2-, and tighten them to specified torque.

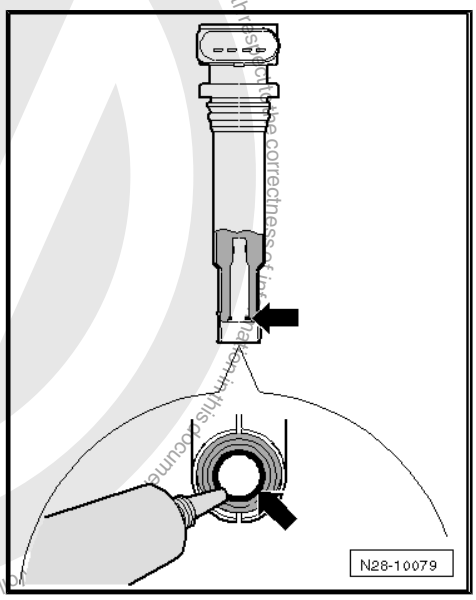

– Fit connectors -1- onto ignition coils with output stages.

– Install air filter housing ⇒ page 64 .

Specified torque	Nm
Spark plugs in cylinder head	22
Bolt for ignition coil with output stage	8

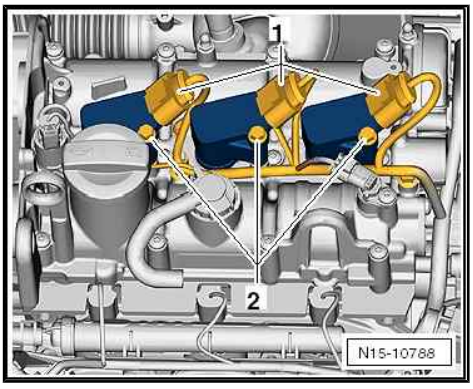

4.51.2 Spark plugs: renewing, 1.0 l TSI engine

Removing

– Remove air filter housing. ⇒ 3-cylinder direct injection engine (1.0 l engine, 4V, EA 211, turbocharger); Rep. gr. 24 ; Air filter; Removing and installing air filter housing .

– Remove air intake pipe. ⇒ 3-cylinder direct injection engine (1.0 l engine, 4V, EA 211, turbocharger); Rep. gr. 21 ; Charge air system .

– Disconnect electrical connector -2-.

– Remove bolt -1-.

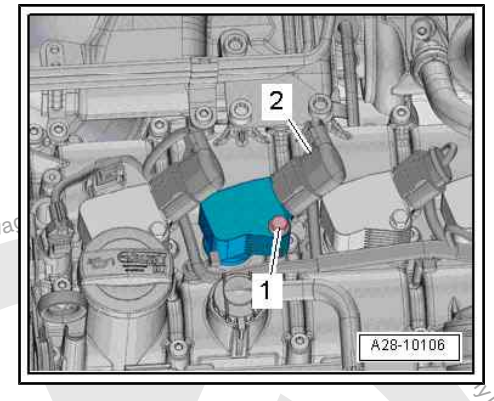

– Push puller - T10530- as far as stop into hole in ignition coil -1-.

– Tighten knurled nut -2- in -direction of arrow-.

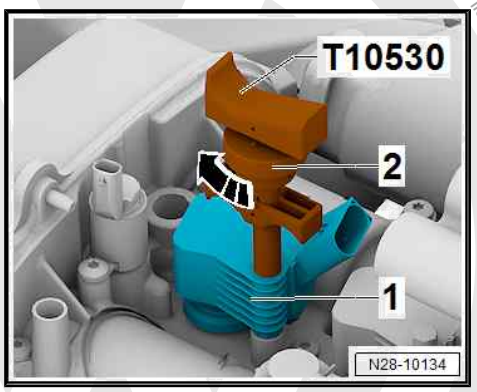

– Pull ignition coil on puller - T10530- in -direction of arrow- out of cylinder head cover.

Repeat step for all ignition coils with output stage.

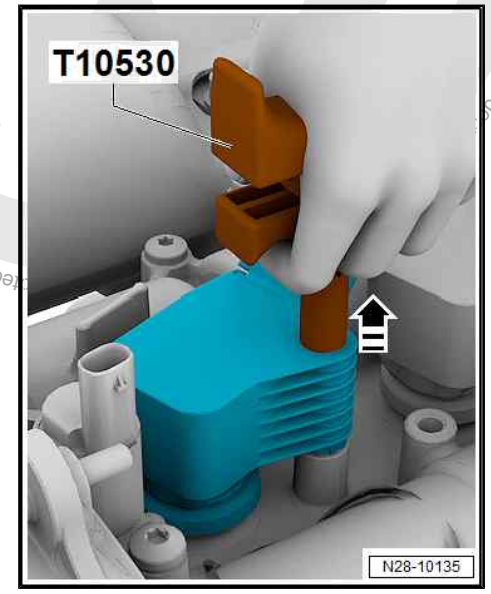

Note

- *Observe installation position of ignition coils with output stage!*
- *Ensure that the cables are not kinked or damaged.*

– Unscrew spark plugs using spark plug socket - 3122 B- .

Note

Please observe disposal instructions!

Installing

Note

- *When installing new spark plugs, regrease ignition coils with output stage using silicone paste ⇒ ETKA .*
- *The applicable silicone paste is stated in the ETKA along with the corresponding ignition coil and/or spark plug.*

– Screw in new spark plugs and tighten them to specified torque using spark plug socket - 3122 B- ⇒ page 107 .

– Apply a thin bead of silicone paste on the circumference of the sealing hose of the ignition coil with output stage -arrow-.

– Align and insert all ignition coils with output stage one after another loosely into spark plug hole.

– Press ignition coils with output stage onto spark plugs evenly by hand (do not use any tools).

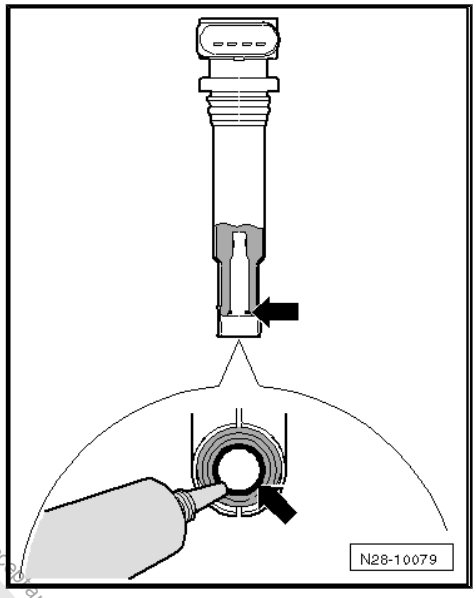

– Tighten bolt -1- of ignition coil with output stage to specified torque ⇒ page 107 .

– Reconnect electrical connector -2-.

Repeat step for all ignition coils with output stage.

– Further assembly is performed in the reverse order of removal.

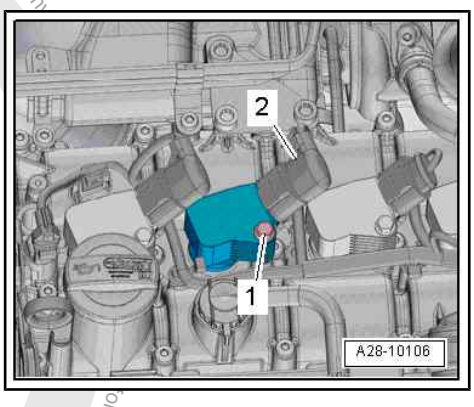

Specified torque	Nm
Spark plugs in cylinder head	22
Bolt for ignition coil with output stage	8

4.52 Warning stickers: checking

All high-voltage components are equipped with warning stickers.

When performing maintenance work, ensure that warning stickers are not soiled or damaged and are present on all high-voltage components.

Note

- *During inspection, only warning stickers that are attached in visible areas are checked.*
- *Missing warning stickers on high-voltage components must be renewed.*

Warning stickers can be found on following components:

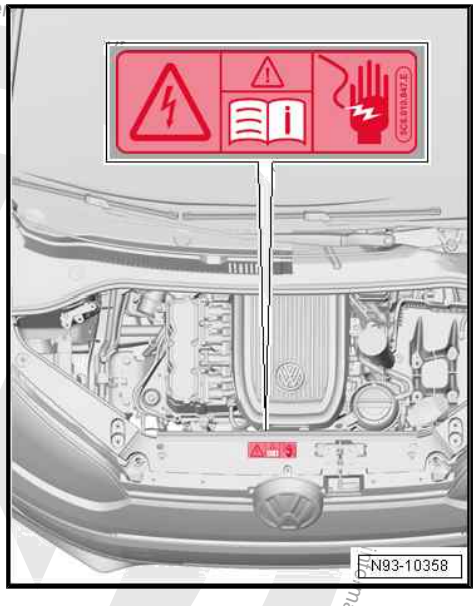

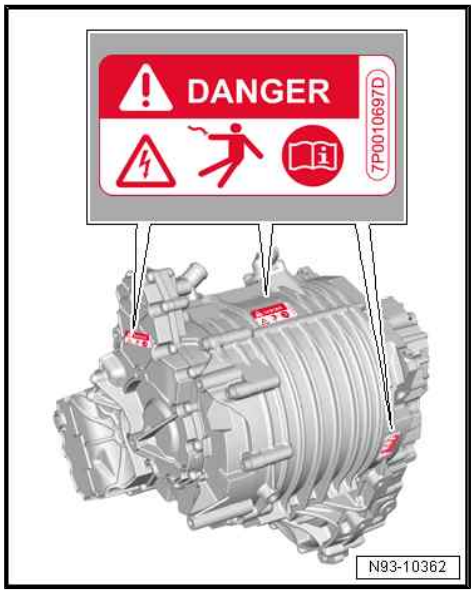

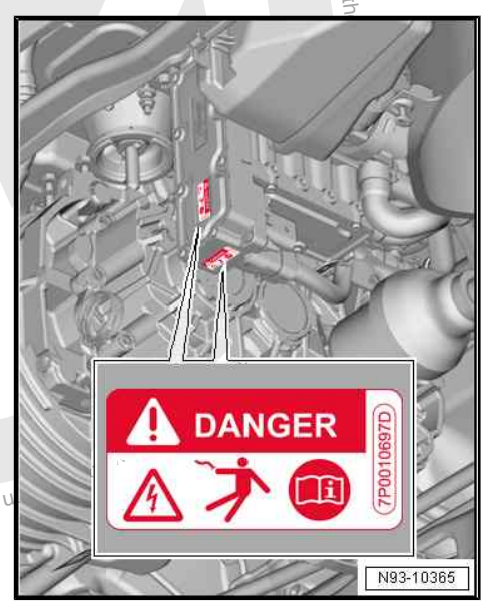

- Front lock carrier
- High-voltage battery 1 - AX2-
- Electric drive motor - V141-
- Power and control electronics for electric drive - JX1-
- Electrical air conditioner compressor - V470-
- High-voltage heater (PTC) - Z115-
- Charger 1 for high-voltage battery - AX4-

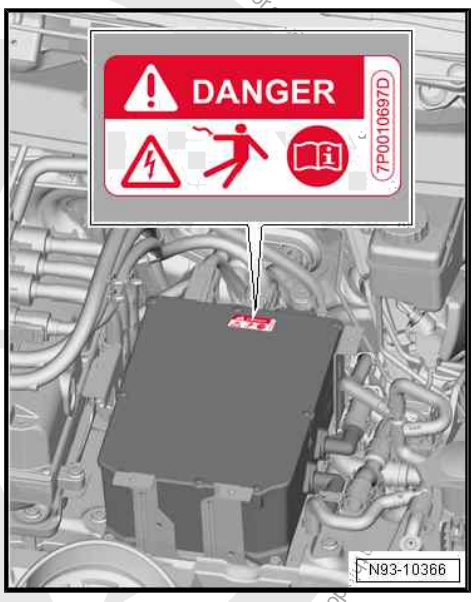

4.53 Plenum chamber: checking water drainage

Note

Water drainage may be hindered by accumulations in the plenum chamber (leaves, needles, etc.).

– With the bonnet open, use a torch to inspect the water drains at the sides of the plenum chamber cover.

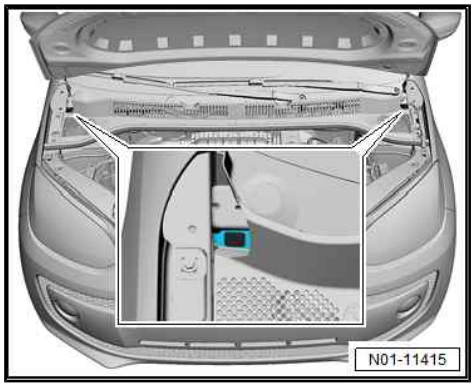

Note

- *Cleaning the water drains is a repair measure.*
- *The repair measure is carried out subject to a separate charge.*

5 Exhaust emissions test

This chapter provides information on the following subjects:

Note

- *Please observe the country specific legal regulations.*
- *The exhaust emissions test described below has been created according to the legal regulations valid in Germany.*

5.1 Exhaust emissions test for petrol engines

Special tools and workshop equipment required

- Exhaust gas testing station L - VAS 7320 A-

Note

- *The following description refers to vehicles fitted with "On-board diagnosis" OBD.*
- *The OBD monitors all components and part systems influencing the exhaust emissions quality.*
- *It is possible to carry out an exhaust emissions test only when all units of the emissions testing station are connected properly and joined to each other according to the operating instructions.*
- *All work to be performed is displayed by the emissions testing station .*

Conditions for testing

- All test conditions and data required for exhaust emissions test are found on EET data sheet for the respective engine.
- For bar code reading the EET data sheet must be printed out.
- Automatic gearbox: selector lever in position "P" or "N".
- Manual gearbox: gear lever in neutral
- Parking brake applied
- 12V battery fully charged (if battery charge is too low, raise idling speed if necessary).

– Perform exhaust emissions test according to instructions on display.

Vehicle data input

– Enter the following data:

- Registration number
- Key numbers
- Vehicle identification number
- Fuel type
- Mileage

The following vehicle data can be found in the vehicle registration certificate part 1:

- Registration number: “e.g. WOB-HH 1234”
- Emission key number “Field 14.1 (code for field 14)”
- Vehicle manufacturer: “Field 2”, “Field 2.1 (code for field 2)”
- Vehicle identification number “field E”
- Type and version “Field D2 (type only)”, “Field 2.2 (code for field D.2)”

Specified data input for EET

There are different ways to enter the specified data:

- 1. By manual input
- 2. By bar code input from EET data sheet
- 3. Through ELSA web service

Note

- *To use the ELSA web service, the exhaust gas testing station L which is used for the exhaust emissions test must be integrated in the workshop network.*
- *The ELSA web service automatically transmits the data for the specific vehicle via the network to the respective mask.*

Manual specified data input for EET:

Note

All test conditions and data required for exhaust emissions test can be found in the ⇒ Data sheets for exhaust emissions test for respective engine.

– Perform manual data input according to instructions on display.

– Enter displayed values on EET data sheet in column “Test values for exhaust emissions test” on display as follows:

1 - Test speed (idling speed)

2 - Warm-up phase for catalytic converter

3 - Engine temperature

4 - Increased idling speed

5 - CO content at increased idling speed

6 - Lambda at increased idling speed

7 - Idling speed

8 - Select regulating probe type; either “Step-type probe” or “Broad-band probe”.

9 - Lambda probe value

Specified data input for EET as bar code:

– If specified data for EET are available as bar code, read bar code of EET data sheet with bar code reader.

All data required are shown on display.

Inspection

– Inspect all exhaust emissions relevant components.

– Check if exhaust system is fitted and complete and check for leaks and damage.

Procedure

– Follow instructions from exhaust gas testing station .

6 Glossary

Term	Explanation
ABS	Anti-locking brake system. The ABS is a regulating system in the brake system, that prevents locking when braking. This helps to maintain directional stability and steerability.
All-wheel drive coupling	Term to be used in place of “Haldex” with immediate effect. Legal implications make this step necessary. The term may nevertheless appear in older documents but need not be replaced.
TCS	Traction control system The TCS prevents the wheels from slipping when the vehicle is driven off.
ATF	Automatic Transmission Fluid. Gear oil for automatic gearbox.
EET	Exhaust emissions test
AUS 32	Abbreviation for “Aqueous Urea Solution” with 32.5% urea content, see also (AdBlue®) ⇒ page 114
AdBlue®	Is an invented name. This fluid is also referred to as “NOx reducing agent AUS 32”, “AUS 32” or “Diesel Exhaust Fluid” (in the US). AdBlue® is a colourless reducing agent that is used for exhaust post-treatment in order to reduce nitrous oxides and particulates. AdBlue® is a registered trademark of the VDA (Verband der Automobilindustrie - German association of the automotive industry) in the USA, Germany, the European Union and other countries. The AdBlue urea solution is not mixed with diesel fuel, but is carried in a separate tank in the vehicle.
ATF level	Filling level of ATF in gearbox
BEV	Battery Electric Vehicle. Electric vehicle
CNG	Compressed Natural Gas. Compressed natural gas
CO	Carbon monoxide. Produced when fuels containing carbon are not combusted completely
Common rail “CR”	This term refers to a common high-pressure injection line, the “rail”, which supplies all cylinders of the relevant cylinder bank with fuel.
Diesel exhaust fluid	Designation used in the US for the NOx reducing agent AUS 32, or the AdBlue®.
DIN	Deutsches Institut für Normung e.V. (German Standards Authority)
DLA	Dynamic Light Assist: a system with variable road illumination allows the vehicle to be driven permanently with main beam without dazzling oncoming traffic.
DPF	Diesel particulate filter
DS	Direct shift
DSP	Digital service plan
DSG	Dual clutch gearbox
ATA	Anti-theft alarm
ECE	Economic Commission for Europe
ETKA	Electronic parts catalogue
Part no.	Abbreviation for part number
EN	European standard
EOBD	European On-Board Diagnosis
ESP	Electronic stabilisation program. Prevents potential vehicle skidding by targeted intervention in the brake and engine management systems.
FAME	Fatty acid methyl ester
GJ	All-season tyre All-season tyres (also called all-weather tyres) can be used in the summer and also the winter.
HEV	Hybrid Electric Vehicle. Hybrid vehicle
MM	Maintenance manual

Term	Explanation
LongLife service	The LongLife service enables extremely long inspection or oil change intervals, depending on individual driving style and conditions under which the vehicle is used. For the LongLife service a special engine oil is required.
LED	Light-emitting diode LED
LPG	Liquefied petroleum gas. Liquefied petroleum gas or LPG
MIL	Malfunction indicator light. American designation for exhaust emissions warning lamp K83
MPI	Multi-point injection
M&S	Winter tyre (M+S tyre). Winter tyres are designed for low temperatures and wintery road conditions.
NAR	North American region
NSC	National Sales Company
NOx reducing agent AUS 32	Designation of aqueous urea solution according to DIN ISO 22241-1, see also (AdBlue®) ⇒ page 114
NO_X reducing agent AUS 32	Designation of aqueous urea solution according to DIN ISO 22241-1, see also (AdBlue®) ⇒ page 114
OBD	On-board diagnosis. The OBD monitors all components influencing the exhaust emissions quality.
OBD-II	American onboard diagnosis
PHEV	Plug-in hybrid electric vehicle. A vehicle with hybrid drive whose battery can also be recharged externally using mains electricity.
PR No.	Abbreviation for production control number. It identifies among other things optional equipment, country-specific deviations
PM	Particulate matter. Soot particle value for diesel engine emissions
PMS	Particulate reduction system
QG0	Vehicles are “not” factory-fitted with components for LongLife service. For maintenance, the intervals based on time and distance (non-flexible intervals) apply.
QG1	Vehicles are factory-fitted with active LongLife service. This means vehicles have a flexible service interval display and are fitted with the following components: ♦ Flexible service interval display in dash panel insert ♦ Engine oil level sensor ♦ Brake lining wear indicator
QG2	The LongLife service is not factory-activated. This means vehicles have a fixed service interval display (time and mileage dependent service intervals): These vehicles are fitted with the following components: ♦ Non-flexible service interval display in dash panel insert ♦ Engine oil level sensor ♦ Brake lining wear indicator
QG3	The LongLife service is not factory-activated. This means vehicles have a fixed service interval display (time and mileage dependent service intervals): These vehicles are fitted with the following components: ♦ Non-flexible service interval display in dash panel insert ♦ Brake lining wear indicator
®	Registered trademark
Readiness code	8-digit binary code which indicates if all exhaust relevant diagnoses have been performed by the electronic engine management.
RON	Research Octane Number. Measurement unit of the knock resistance of petrol
SPF	Particulate filter
TPMS, TPLI	Tyre Pressure Monitoring System, Tyre Pressure Loss Indicator

Term	Explanation
SAE	Society of Automotive Engineers. Association which creates proposals/guidelines for implementing legal requirements (e.g. standards).
SCR	With the SCR process (selective catalytic reduction) the noxious nitrogen oxides emissions are reduced to a great extent and are converted to steam and nitrogen by the urea solution. A special urea solution (AdBlue®) is injected into the exhaust system upstream of a special catalytic converter.
PFI	Intake manifold injection system (indirect injection system)
SULEV	Super Ultra Low Emission Vehicle
TSI	TSI turbocharger. Charging with turbocharger only.
	TSI twincharger. Charging with turbocharger and compressor
TGI	Charging with turbocharger and natural gas injection system
TDI	Turbo diesel engine - direct injection
ULEV	Ultra low emission vehicle
VDA	German association of the automotive industry
VW	Volkswagen
ESI	Extended servicing interval
ZEV	Zero Emission Vehicle
ASSY	Assembly

7 ---Change history---

Date	Chapter	Scope of modification
24/01/2019	Natural gas system: inspecting natural gas tank for corrosion and leakage ⇒ page 54	Chapter updated.
30/11/2018	Engine oil: capacities and specifications ⇒ page 74	Chapter updated.
	Tyres: checking condition, wear pattern, tyre pressure and tread depth ⇒ page 34	Chapter updated.
	Service tables ⇒ page 4	Chapter updated.
	Poly V-belt: checking condition ⇒ page 60	Chapter updated.
	Road test (performance, handling, noises, air conditioner etc.): carrying out ⇒ page 81	Chapter updated.